User's Manual

CKT3563 Series

Battery Internal Resistance Tester

(AC Resistance Meter)

2016-3-15

Changzhou Chuangkai Electronic Co.,Ltd **Edition V1.0**

Contents

Introduction 9

Checking Packing Contents 9

Safety Notes 11

Chapter 1 Overview 17

1.1 Overview and Features 17

1.2 Features 18

1.3 Component Names and Operation Overview 19

1.4 Dimension 24

1.5 Screen Composition 24

Chapter 2 Preparing for Measurement 27

2.1 Measurement Process Overview 27

2.2 Basic Parameter Setting Process 29

2.3 Pre-measurement Inspection 30

2.4 Test leads Connection Method 31

Chapter 3 Basic Settings 33

3.1 Setting Test Range 33

3.2 Setting Measurement Speed 35

3.3 Setting Test Mode 36

3.4 Setting Trigger Delay 37

3.5 Set Test Trigger Source 38

3.6 Set Average Number of Times 39

3.7 Broadcast Mode Setting 40

3.8 Multiple Test Tetting 41

3.9 System Setting 42

3.9.1 Language Setting 42

3.9.2 Power frequency setting 42

Chapter 4 Comparator Setting 43

4.1 Comparator Function 43

4.1.1 Turn on compare mode 43

4.1.2 Comparison result signal output method 44

4.2 Sorting Function Setting 45

4.2.1 Select comparator settings page 45

4.2.2 Select relevant menu items 45

4.3 Beep Mode Setting..... 48

4.4 Count Setting 49

4.5 Absolute Value Setting 50

Chapter 5 Measurement..... 51

5.1 Start Test 51

5.2 Measured Value Display..... 52

5.3 Perform Clear Zero 53

Chapter 6 Measurement Panel Save 57

6.1 Save Panel Setting 57

6.2 Retrieve Measuring Setting..... 58

6.3 Save Measurement Data Settings 58

6.4 Save Measurement Data Export 59

Chapter 7 EXT I/O Port (Handler)..... 60

7.1 EXT I/O Terminal and Signal 61

7.1.1 Port signal description 62

7.1 Port signal connection method..... 65

7.2 Timing Diagram..... 66

7.2.1 Timing diagram for external trigger..... 67

7.2.2 Read process during external trigger..... 68

Chapter 8 Communication 68

8.1 RS232 Communication Mode..... 69

8.1.1 Interface and cable..... 69

8.1.2 RS232 Connection Method..... 69

8.1.3 RS232 Communication Setting..... 70

8.2 RS485 Communication Method..... 71

8.2.1 RS485 Connection Method..... 71

8.2.2 RS485 Communication Setting..... 72

8.3 LAN Communication Method 73

8.3.1 Interface and cable..... 73

8.3.2 LAN Connection Method 74

8.3.3 LAN Communication Setting..... 75

8.4 USB Interface..... 75

Chapter 9 Parameter 76

9.1 General Parameters..... 76

9.2 Accuracy 77

Chapter 10 Communication Commands..... 78

10.1 General Commands 78

10.2 SCPI Command Structure..... 79

10.3 SCPI Sub-command System 80

Chapter 11 MODBUS Communication Commands..... 86

11.1 Register Overview..... 87

11.1.1 Holding register..... 87

11.1.2 Input register 88

11.2 MODBUS Commands 88

11.2.1 （0x03）Read hold register commands..... 88

11.2.2 Read input register commands（0x04） 89

11.2.3 Write register commands （0x10）..... 90

11.2.4 Trigger instrument test command （0x74）..... 91

Introduction

Thank you for purchasing CKT3563 battery tester. To obtain maximum performance from this product, please read this manual first, and keep it handy for future reference.

Registered trademarks

Windows and Excel are registered trademarks of Microsoft Corporation in the United States and/or other countries.

Checking Packing Contents

When receiving instrument, please check carefully to ensure that the instrument is not damaged during transit. In addition, special inspections of accessories, panel switches and connectors are required. If the instrument is found to be damaged or it fails to operate as described in the user manual, please contact us.

To transport this instrument, use the original packaging and wrap it in a double carton. Damage during transit is not covered by the warranty.

Check the package contents as follows:

No.	Item	Quantity
1	CKT3563 Series Battery Tester	1
2	User Manual	1
3	RS232 Communication Cable	1
4	Test Cable	1
5	AC Power Cord	1

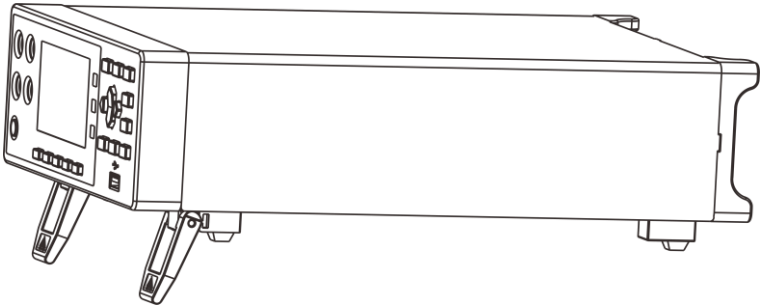

3563 series battery tester

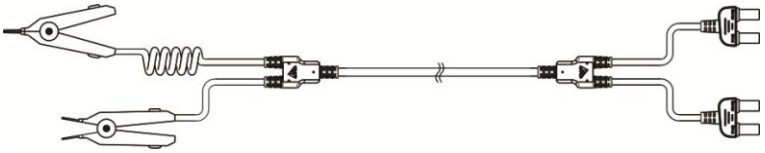

9363A test cable

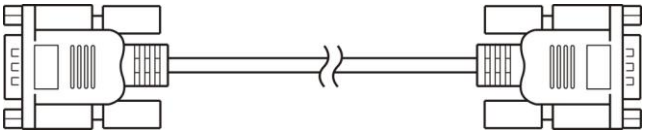

9800 RS232 communication cable

Safety Notes

The instrument is designed to comply with the IEC 61010 safety standard and has been thoroughly tested for safety prior to shipment. However, if it is used improperly, it may cause injury or death and damage the instrument. Be sure to read through this manual and its precautions before use. Our company does not assume any responsibility for accidents and injuries caused by defects in the instrument itself.

Safety Signs

This manual contains the information and warnings necessary to operate the instrument safely, which are necessary to ensure that the instrument is in safe operating condition. The following safety precautions must be read carefully before use.

The information ⚠ in this manual is particularly important and should be read carefully before using the machine. The number ⚠ is brushed on the instrument, indicating that the user must refer to the corresponding topic in the manual before using the corresponding function.

Stands for DC (Direct Current).

Stands for fuse

Stands for ground terminal

Accuracy

We use the f.s. (full scale), rdg. (reading) and dgt. (resolution) values to define the measurement tolerances, which have the following meanings:

f.s. (Maximum display value or measurement range)

This is usually the maximum display value. In the instrument, this indicates the currently used range.

rdg. (Reading or displayed value)

The value currently being measured and the value indicated on the measuring instrument.

dgt. (Resolution)

The smallest displayable unit on a digital measuring instrument, i.e., the input value that causes digital display to show a "1".

Usage notes

Installation Environment

Operating temperature and humidity:
0 to 40 ° C, below 80% RH (no condensation)

- Ensure the temperature and humidity range of accuracy:
23 ± 5 ° C, below 80% RH (no condensation)

- To avoid malfunction or damage to the instrument, do not place the tester in the following situations:

- Places where the sun is shining directly at high temperatures.

- It will splash to the place where the liquid temperature is high and condensation occurs.

- Exposed to dusty places.

- Locations where corrosive or explosive gases are flooded

- Locations with strong electromagnetic fields and electromagnetic radiation.

- Places where mechanical vibration is frequent.

Checking Before Use

Before using this instrument, verify that the operation is normal and that there is no damage during storage or transportation. If you find any damage, please contact us.

WARNING	Before using the instrument, make sure that the test leads are well insulated and whether there are conductors are exposed. If a similar situation occurs, there is a danger of electric shock when using this instrument. Please contact us.

Handling Precautions

DANGER	To avoid electric shock, do not disassemble the instrument electronic enclosure. There are high pressure and high temperature parts inside the instrument during operation.
CAUTION	To avoid damage to the instrument, physical shock should be prevented when handling and operating the instrument. Special care should be taken to prevent the instrument from falling.
NOTE	Be sure to turn the power off after using it.

Measurement Precautions

⚠ DANGER	To avoid electric shock and short circuit, the following procedures must be observed: • Do not get the instrument wet or use wet hands to measure. Failure to do this may result in electric shock. • Do not modify, disassemble or repair. Doing so may cause fire, electric shock or personal injury.
⚠ CAUTION	• Do not place on unstable pedestals or in inclined places. Failure to do this may result in injury or host malfunction due to falling or tipping over. • To prevent damage to the instrument, avoid vibration and collision during handling and use. Pay particular attention to collisions caused by falling. • To avoid damage to the instrument, do not connect the measurement terminals to the EX.I/O terminals or communication terminals.

Handling Leads and Cables

⚠ DANGER	To prevent an electric shock, do not short-circuit the top of the test leads and the lines with voltage.
⚠ CAUTION	• When testing, for your safety, please use the instrument's own test lead option. • To avoid damaging test leads, do not bend or stretch the test leads. • The probe at the front of the test leads is sharp, taking care not to be scratched. • To avoid damage to the test leads, do not take the cables while you are plugging or unplugging the test leads. Hold the connectors.

Chapter 1 Overview

1.1 Overview and Features

3563 series is high-precision, wide-range, battery internal resistance tester controlled by a high-performance microprocessor. The internal resistance range is from 0.1μΩ to 3kΩ (3563), minimum resolution is 0.1μΩ, and maximum display is 32000. The voltage range is from 10μV to 60V (3563), minimum resolution is 10μV, and maximum display is 600000.

3563 series instruments support multi-channel scanning test function. By adding our multi-channel scanning tester, we can simultaneously scan and measure multiple batteries.

The instrument has PLC/RS232/RS485/LAN, 4 types of interfaces, and is equipped with two sets of communication command protocols. When using Ethernet and RS232 communication, the instrument uses SCPI (Standard Command for Programmable Instrument standard instrument set). When using RS485 communication, the instrument uses the MODEBUS command protocol. Users can efficiently perform remote control and data acquisition functions as well as instrument networking.

3563 series can be used to test various lithium batteries, nickel metal hydride batteries, nickel cadmium batteries, button batteries, column batteries, soft pack batteries and so on.

Model Specifications

To meet the needs of different users, CKT3563 series provide below model options:

Model	Range	Basic Accuracy
CKT3563	0.1μΩ ~ 3kΩ	0.3%
	10μV ~ 60V	0.01%
CKT3563A	0.1μΩ ~ 3kΩ	0.3%
	10μV ~ 300V	0.01%
CKT3563B	0.1μΩ ~ 3kΩ	0.3%
	10μV ~ 800V	0.01%
CKT3564	0.1μΩ ~ 3kΩ	0.3%
	10μV ~ 1000V	0.01%
CKT3563-12H	0.1μΩ ~ 3kΩ	0.3%
	10μV ~ 60V	0.01%
CKT3563-24H	0.1μΩ ~ 3kΩ	0.3%
	10μV ~ 60V	0.01%
CKT3563A-12H	0.1μΩ ~ 3kΩ	0.3%
	10μV ~ 300V	0.01%
CKT3563A-24H	0.1μΩ ~ 3kΩ	0.3%
	10μV ~ 300V	0.01%
CKT3563B-12H	0.1μΩ ~ 3kΩ	0.3%
	10μV ~ 800V	0.01%
CKT3563B-24H	0.1μΩ ~ 3kΩ	0.3%
	10μV ~ 800V	0.01%

1.2 Features

Exterior

- 3.5-inch high-resolution TFT screen display, easy to operate
- Compact and powerful

Excellent test performance

- Internal resistance minimum resolution 0.1μΩ
- Minimum voltage is 10μV

Quick Measurement

- Minimum test cycle only needs 8.6ms

Four-terminal test

- High precision measurement, low internal resistance

Various interface configuration

- HANDLER interface
- RS-232C interface
- RS-485 interface
- Ethernet interface
- U disk interface (for upgrade programs)

Powered by

- 100~256 V wide power supply
- Power frequency 50Hz/60Hz
- Maximum power consumption 10W

1.3 Component Names and Operation Overview

Front Panel

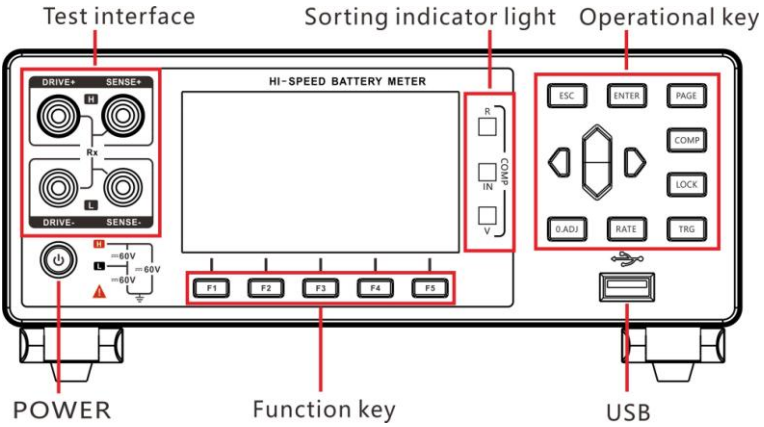

Rear Panel

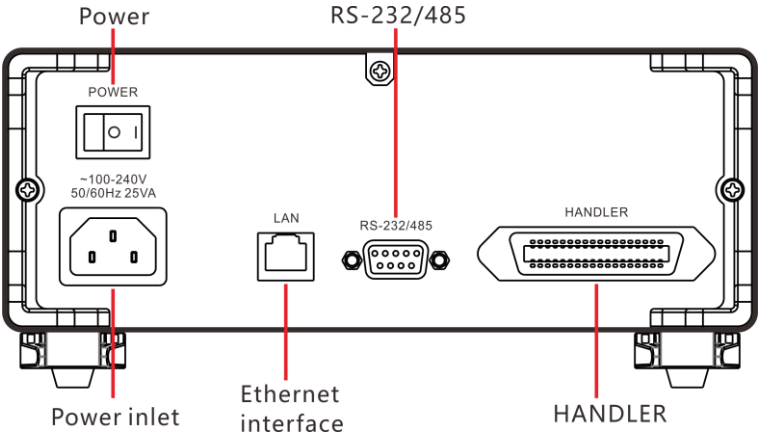

Side View

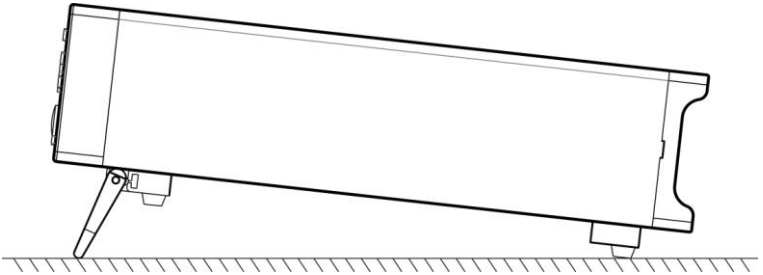

Bottom

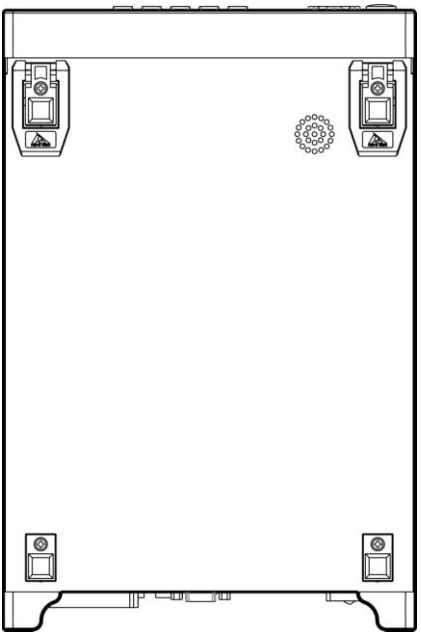

Keys

Keys	Description
F1	Function key F1
F2	Function key F2
F3	Function key F3
F4	Function key F4
F5	Function key F5
ESC	Function key Escape Cancellation of operation
ENTER	Function key Enter Acceptance of settings and manual trigger input
PAGE	[Page Switch] switch to [Test Page] <-> [Setup Page] <-> [Panel Page] <-> [Communication Settings Page] <-> [Sort Settings Page] <-> [I/O Settings page]
COMP	On/Off Comparator key

	**Lock key** **Short press [LOCK] key to lock the current page and the other keys get invalid. Long press to unlock.**
	**[0.ADJ] key** **Short press to zero-adjustment function** **Long press to release the zero-adjustment function**
	**[HOLD] key** **Hold the current measurement during the test**
	**[Trigger] key** **Single trigger test to the instrument in manual trigger mode**
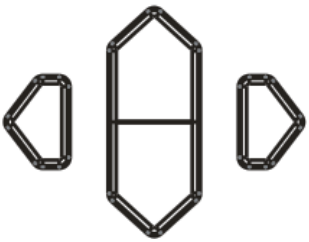	**[Direction] key,** **Select menu items or set values**

1.4 Dimension

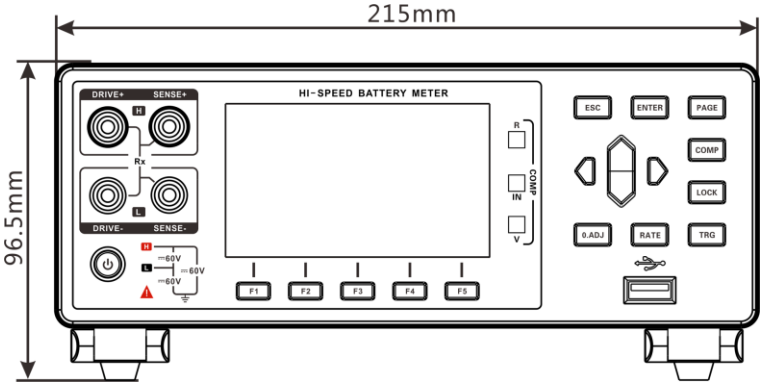

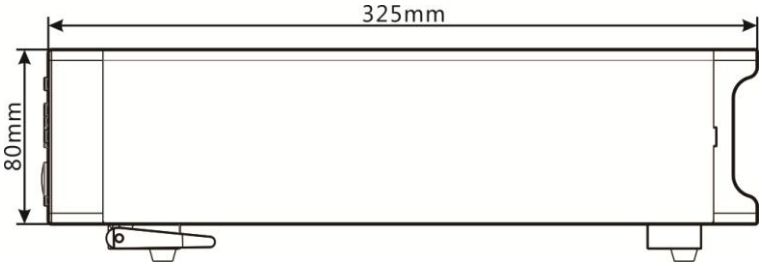

1.5 Screen Composition

Measurement Display

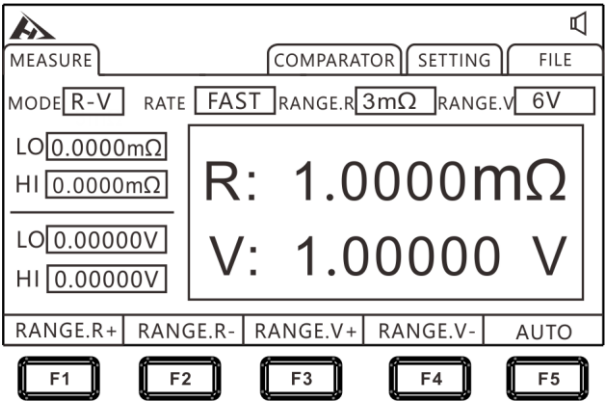

Comparator Display

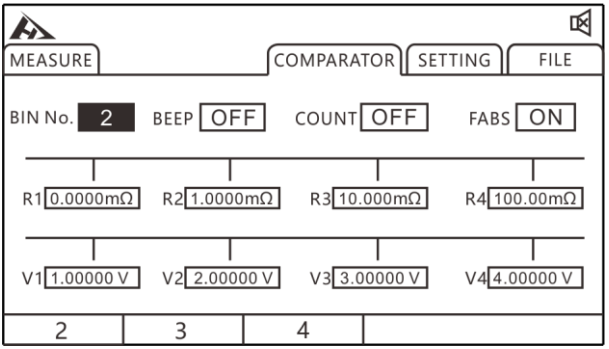

Setting Display

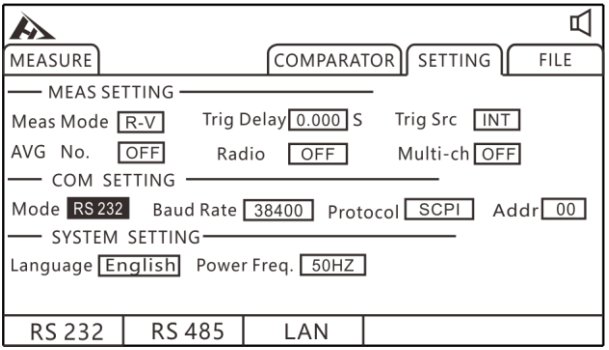

File Dispaly

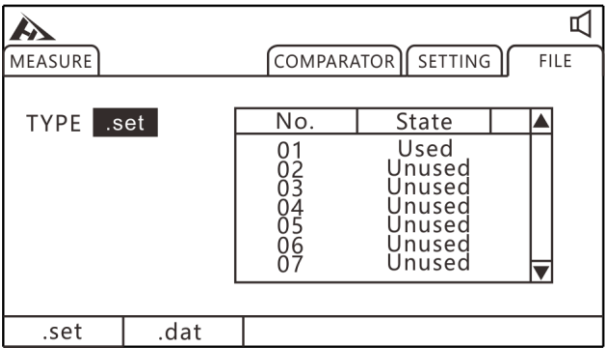

Chapter 2 Preparing for Measurement

2.1 Measurement Process Overview

The instrument is kept power off, the following steps are taken to prepare for testing.

1. Turn off the instrument and connect the test leads.

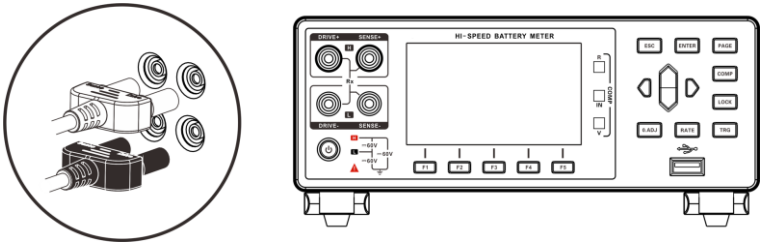

2. Plug AC power cord into the mains outlet

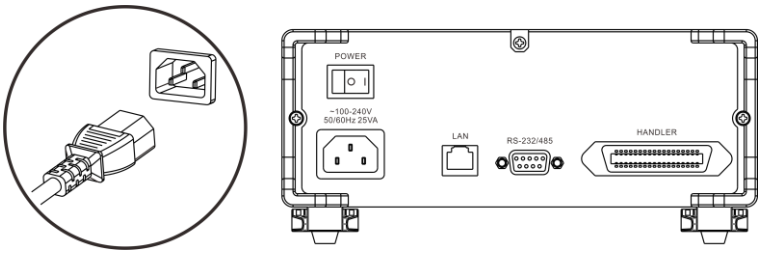

Ensure that the power cord is well grounded, which is conducive to the stability of the test.

3. Turn on the power at back of instrument.

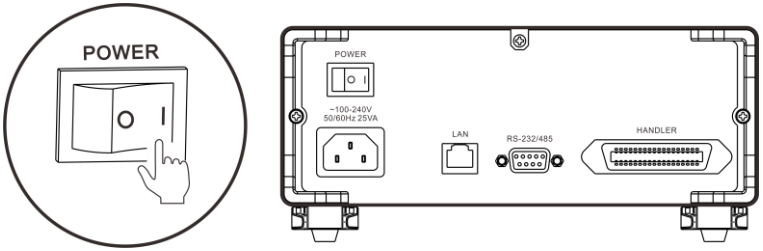

At the time being, internal power of the instrument has been turned on and the instrument is in standby mode.

4. Press and hold POWER button at panel to turn on the power.

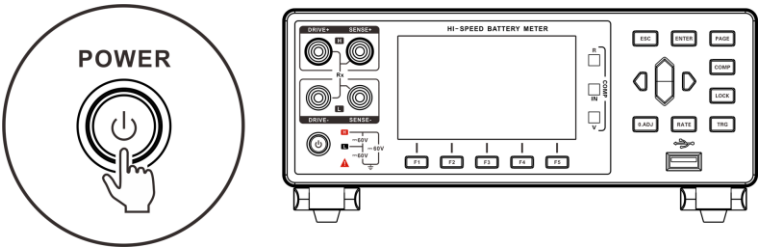

When instrument is in the standby mode, POWER button at panel light is red, long press POWER button, the power is turned on, the screen is lit, and light of button at panel turns green.

5. Setting test parameters (refer to section 3.1 for details)

6. Start to test

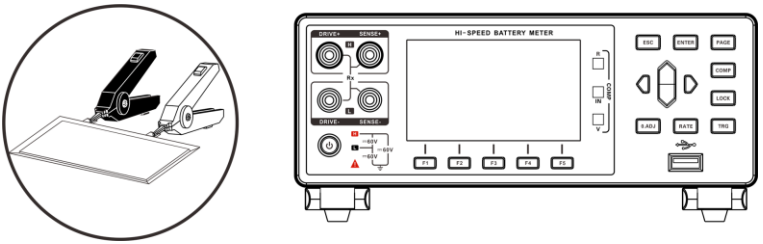

7. Compete test, turn off the power

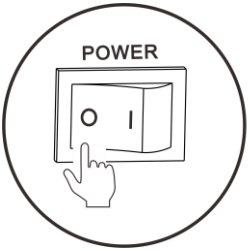

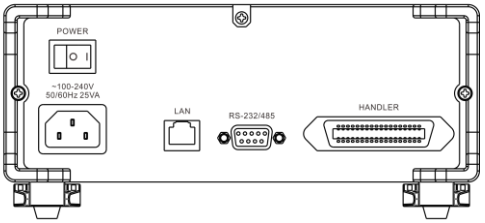

2.2 Basic Parameter Setting Process

Trigger mode setting INT/EXT/MAN/AUT

↓

Select suitable resistance range and voltage range, or Automatic range

↓

Measurement speed setting, Ultra/fast / medium / slow

↓

Comparator setting, upper/lower limit/OFF comparator for internal resistance and voltage

↓

communication setting, set communication interface, select protocol type if request

2.3 Pre-measurement Inspection

Before using the instrument, inspect it to verify that no damage has occurred during storage or transportation and it operates normally. If you find any damage, contact us.

Instrument and peripheral checking

Inspection item	Action
Is there any damage or a crack in the instrument? Are the internal circuits exposed?	If any damage is found, do not use it. Return it for repair.
Is there any dust or contamination, such as pieces of metal, on any terminals?	If dust or contamination is adhered to a terminal, clean the terminal with a swab.
Is the test lead coating broken or is the metal exposed?	If the coating of a test lead is broken, the measured value may become unstable or have an error. It is recommended to replace the intact wire.

Power-on checking

Inspection item	Action
After turn on the power on at the back of the instrument, check whether instrument **POWER** button lit or not?	Return the instrument for repair, if the **POWER** button is not lit.

When power is turned on, does the entire display turn on? the model name and measurement screen are displayed normally?	If the screen does not behave like this, the instrument may be damaged internally. Return it for repair.

2.4 Test Leads Connection Method

WARNING

- The test leads port is sharp, taking care not to be scratched.
- For safety reasons, test leads supplied with the instrument should be used.
- To avoid electric shock, make sure the test leads are properly connected

Front panel connection

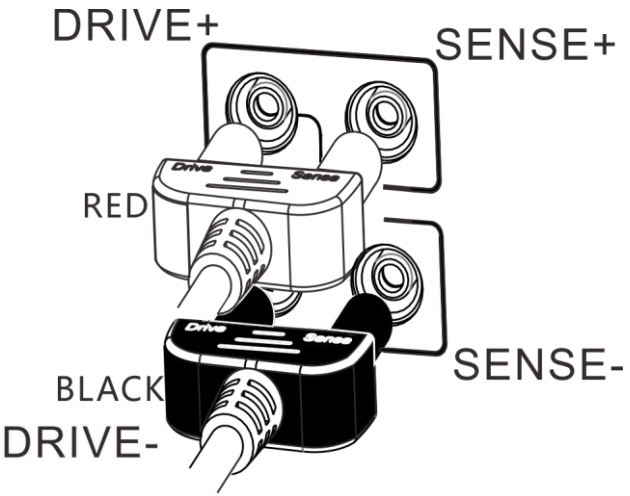

Test leads connection

1. 9363-A Test clip type test leads (test soft pack battery)

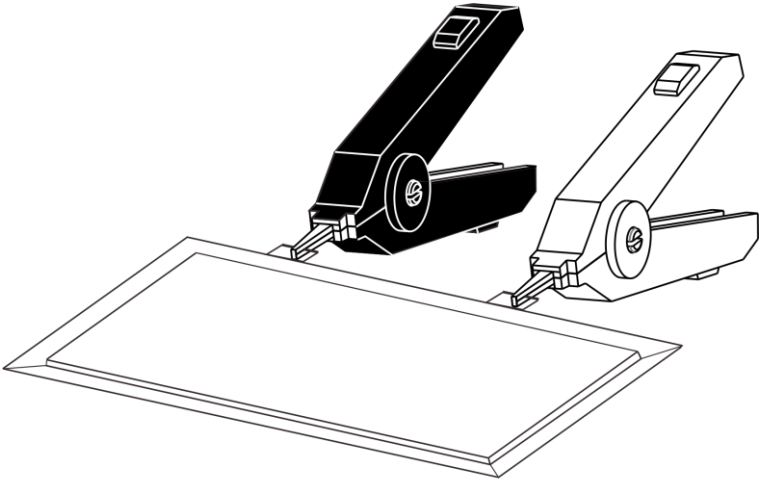

(Clip Test)

2. 9363-B Test probe type test leads

(Probe Test)

Chapter 3 Basic Settings

In order to use the instrument correctly, read this chapter before testing.

3.1 Setting Test Range

The range setting is divided into manual range and automatic range. Auto range instrument will automatically select a suitable range to test based on the battery being tested.

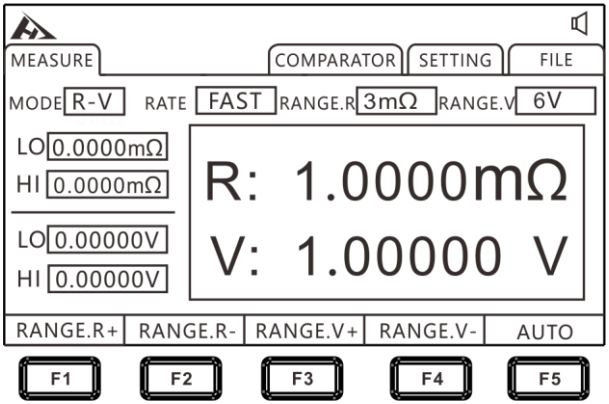

Manual Range Setting

Under measurement state, press [F1]-[F4] to switch the range. Even if auto range function is turned on, manual range switching is also valid (when the auto range is turned on, auto range function will be automatically turned off when the range is manually switched).

Resistance Range: 3mΩ↔30mΩ↔300mΩ↔3Ω ↔30Ω↔300Ω↔3KΩ

Voltage Range: 6V ↔ 60V

Auto-Range Setting

Under measurement state, press [F5] to switch to auto range. At auto range, [AUTO] mark is lit, when the auto range is turned off, [AUTO] mark is not displayed.

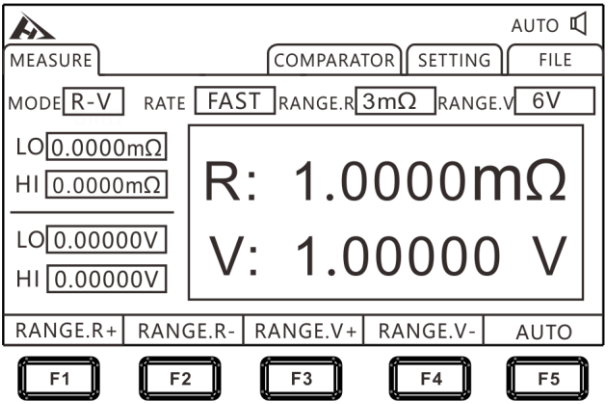

Note:

- If range is changed while auto range is on, auto range is automatically released and becomes manual range.
- The auto range may become unstable because of the measured object. In this case, specify manual range or extend the delay time. For the test accuracy of each range, refer to the "Measurement Accuracy Table".

3.2 Setting Measurement Speed

Press [RATE] button on the test page to switch the current test speed. The ultra-fast sampling period is 100 times/second, fast sampling period is 50 times/second, medium-speed sampling period is 20 times/second, slow sampling period is 3 times/second.

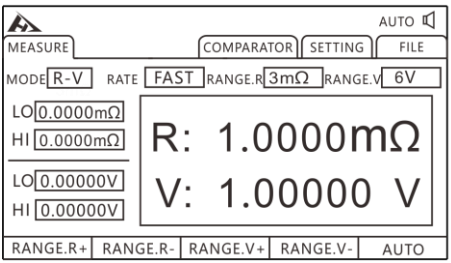

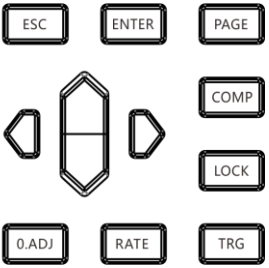

Note: • When measurement delay is set, the sampling period will be slower.

• Test time includes ADC sampling, sorting output, and display time.

• In the test environment, when electric field interference is large or the test is difficult to stabilize, it is recommended to use slow speed for test.

3.3 Setting Test Mode

Press [PAGE] button on Meas page to switch to settings page.

1. Select parameter setting page

2. Select relevant menu items

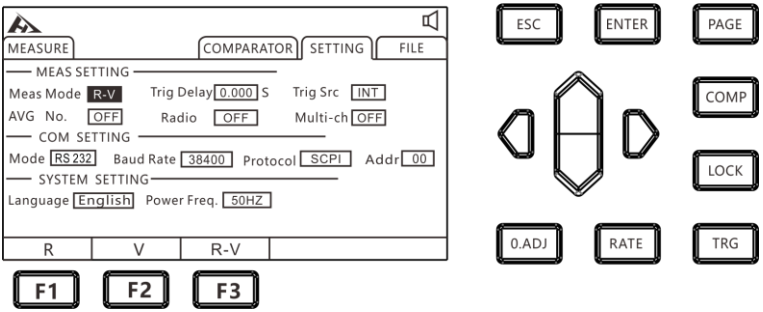

Press [F1] to set R mode, only test and display the resistance (as shown below); press [F2] to set V mode, only test and display the voltage; press [F3] to select the R-V mode, test and display voltage and resistance at the same time.

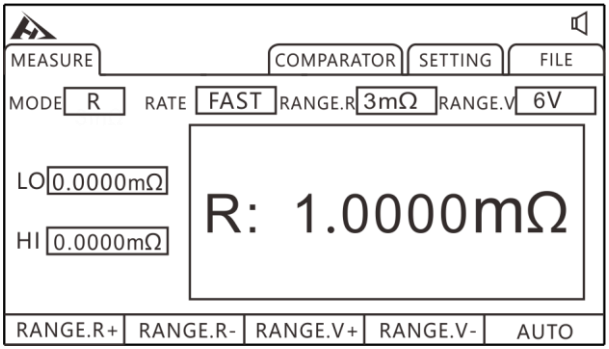

3.4 Setting Trigger Delay

Set trigger delay to adjust measurement stability time. By using this function, even if the contact of the measured object is unstable, measurement can be started after internal circuit is stabilized.

1. Select parameter setting page

Press the [PAGE] key to select Parameter setting page

2. Select related menu items

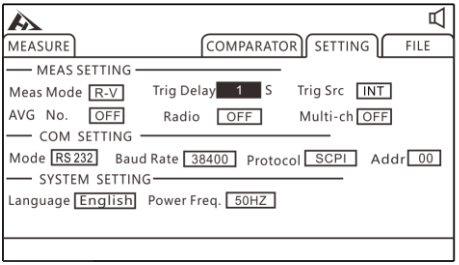

Press up, down, left and right keys to select the menu item to set

Press [ENTER] to enter the setting, press the up, down, left and right keys to set number. If the delay time is increased, display of the measured value will be slower.

3.5 Set Test Trigger Source

Users can select internal trigger/external trigger/manual trigger/auto trigger.

1. Select parameter setting page

Press the [PAGE] key to select Parameter setting page

2. Select relevant menu items

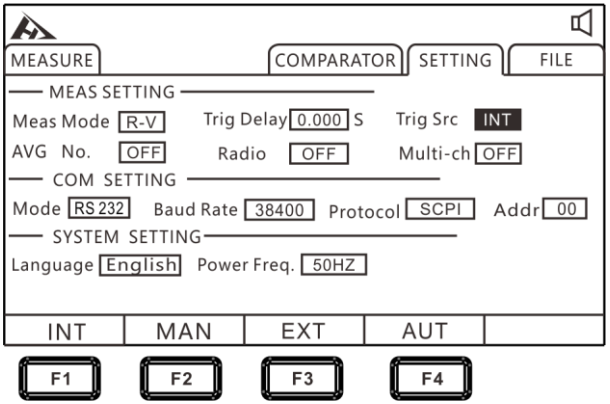

Menu item	Meaning
[INT]	Internal trigger (instrument internal loop trigger test)
[EXT]	External trigger (external IO port signal trigger, Chapter 7)
[MAN]	Manual trigger (press TRG button at panel to trigger a test)
[AUT]	Automatic test (automatically judge whether the tested part is connected and tested)

3.6 Set Average Number of Times

A plurality of measured values are averaged and displayed. By using this function, oscillation of measured value can be reduced and interference can be suppressed.

Average number of times:

OFF ↔ 2 ↔ 3 ↔ ...↔ 15↔16

1. Select parameter setting page

Press the [PAGE] key to select Parameter setting page

2. Select relevant menu items

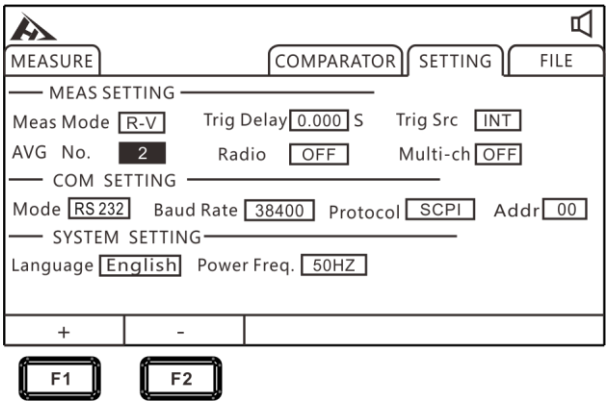

Press [F1] [F2] to add or subtract the average number of times or turn off average number of times.

Menu item	Meaning
[OFF]	Function of average number of times is turned off

[2]	Take 2 average values to display
[3]	Take 3 average values to display
[...]	Take 4~14 average values to display
[15]	Take 15 average values to display
[16]	Take 16 average values to display

3.7 Broadcast Mode Setting

When the broadcast mode is ON, test data is automatically uploaded to the communication terminal in all trigger modes. Under OFF state, test data is not uploaded.

1. Select parameter setting page

Press the [PAGE] key to select Parameter setting page

2. Select relevant menu items

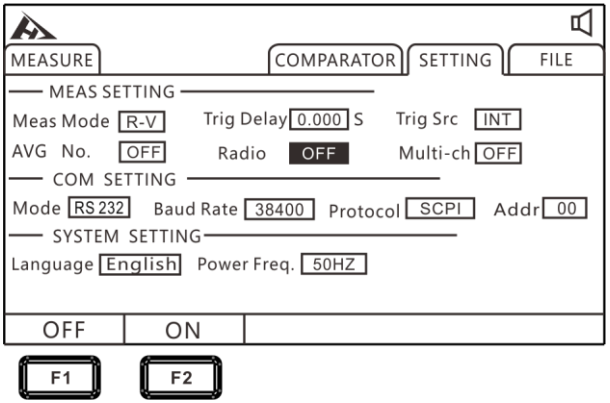

Press [F1] [F2] to turn on/off the broadcast mode

3. Format of the uploaded data

The multi-channel test function is turned off, data format is:

Resistance, voltage

±□□□.□□□E-3,±□□□.□□□E-0

After the multi-channel test is turned on, data format is:

Resistance, voltage, channel number

±□□□.□□□E-3,±□□□.□□□E-0,N

3.8 Multiple Test Setting

Multi-channel test switch is mainly used to connect multi-channel test equipment. It is turned on when the tester needs to connect to multiple scanners, and is turned off when not needed. When the multi-channel function is turned on, the instrument will turn on the external power supply for the scanner, and current channel number will be automatically added after the data is uploaded after the broadcast mode is turned on.

1. Select parameter setting page

Press the [PAGE] key to select Parameter setting page

2. Select relevant menu items

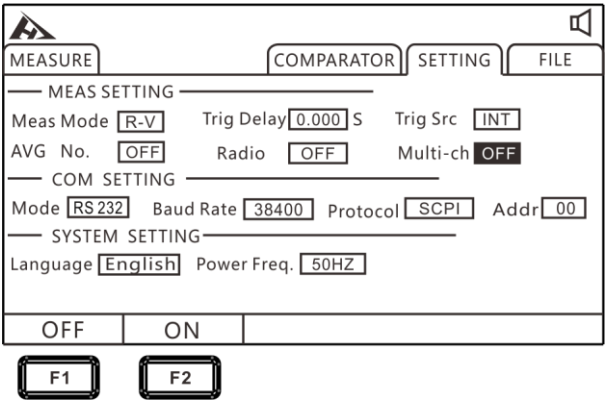

Press [F1] [F2] to turn off and turn on the multi-channel test.

3.9 System Setting

3.9.1 Language Setting

The instrument is available in two languages, Chinese and English, which meet international user' s request.

1. Select the parameter setting page

Press the [PAGE] key to select Parameter setting page

2. Select relevant menu items

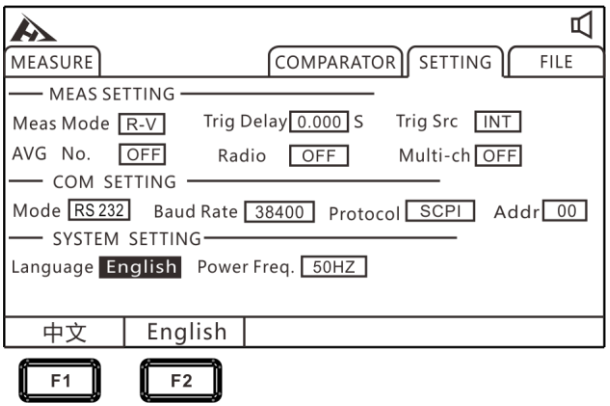

Press [F1] [F2] to select the Chinese or English.

3.9.2 Power Frequency Setting

The power supply has 50Hz and 60Hz to choose from. Setting power supply frequency correctly is good for resisting external interference and improving test accuracy.

1. Select the parameter setting page

Press the [PAGE] key to select Parameter setting page

2. Select relevant menu items

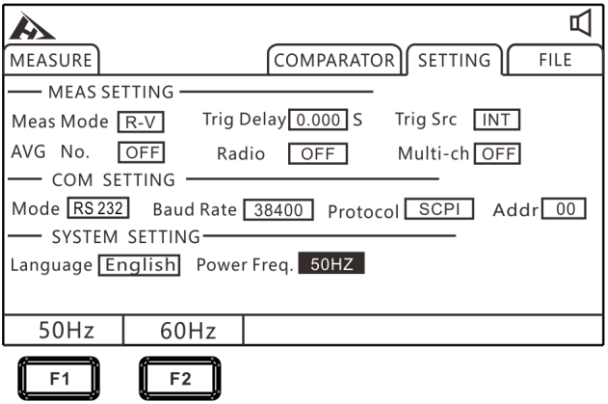

Press [F1] [F2] to select the power frequency as 50Hz or 60Hz.

Chapter 4 Comparator Setting

The instrument has comparison sorting function, which can compare and sort output according to set value for the quality of tested product.

4.1 Comparator Function

4.1.1 Turn on compare mode

Press [COMP] button to turn on/off the comparator.

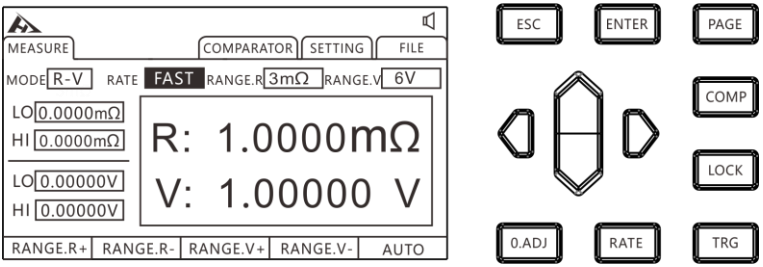

After comparator is turned on, the current measured value of voltage & resistance value will be compared with upper limit and lower limit of this comparator respectively, then the sorting result is output through the HANDLER interface.

4.1.2 Comparison Result Signal Output Method

When comparator function is turned on, the instrument provides three alarm outputs:

1. Panel LED light alarm

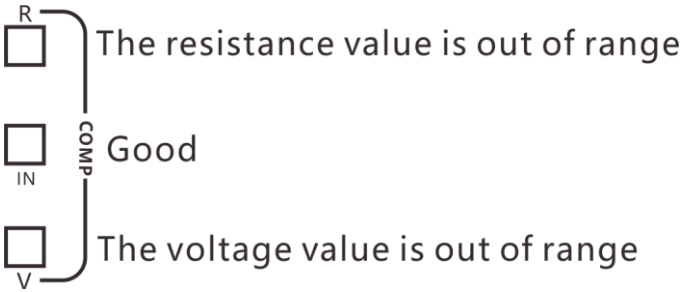

If voltage and internal resistance are not within the range, red light V and red light R are displayed. The green light IN is displayed for both internal resistance and voltage PASS.

2. Sound alarm

Refer to (section 4.3) for this function.

3. External I/O port, signal output

Refer to (7.1) for this function.

4.2 Sorting Function Setting

4.2.1 Select Comparator Settings Page

Press the [PAGE] key to select COMPARATOR page

4.2.2 Select Relevant Menu Items

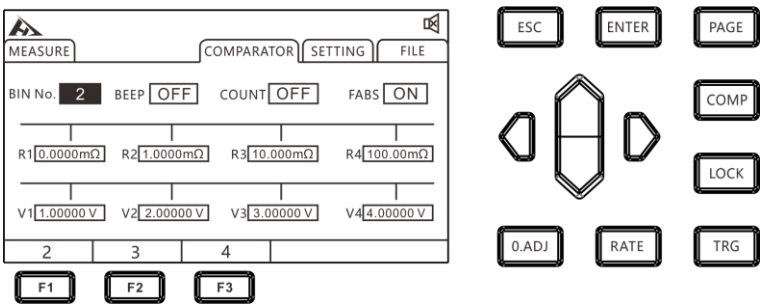

Select sorting item, press [F1] [F2] [F3] to select the 2nd, 3rd, and 4th comparison modes.

Comparison mode: 2 ranges

1. Sorting conditions and results relationship

Conditions	Result

R1 ≤ current resistance value ≤ R2	R_IN
current resistance value < R1	R_LO
current resistance value > R2	R_HI
V1 ≤ current resistance value ≤ V2	V_IN
current resistance value < V1	V_LO
current resistance value > V2	V_HI

Example: Select comparison function to be turned on, sorting setting is 2-range sorting, current comparator value is set as follows:

Resistance lower limit R1	Resistance upper limit R2
80 mΩ	120 mΩ
Voltage lower limit V1	Voltage upper limit V2
1.45V	1.55V

2. Sorting result table

Battery	Resistance	Voltage	Sorting Result
1	100 mΩ	1.40 V	R_IN V_LO NG
2	100 mΩ	1.50 V	R_IN V_IN GD
3	100 mΩ	1.60 V	R_IN V_HI NG
4	60 mΩ	1.40 V	R_LO V_LO NG
5	60 mΩ	1.50 V	R_LO V_IN NG
6	60 mΩ	1.60V	R_LO V_HI NG
7	150 mΩ	1.40 V	R_HI V_LO NG
8	150 mΩ	1.50 V	R_HI V_IN NG
9	150 mΩ	1.60 V	R_HI V_HI NG

Comparison mode: 3 ranges

1. Sorting conditions and results relationship

Conditions	Result
R1 ≤ current resistance value < R2	R_P1

R2 ≤ current resistance value ≤ R3	R_P2
current resistance value < R1 or current resistance value	R_NG
V1 ≤ current resistance value < V2	V_P1
V2 ≤ current resistance value ≤ V3	V_P2
current resistance value < V1 or current resistance value > V3	V_NG

Example: Select comparison function turned on, sorting setting is the 3-range sorting, current comparator value is set as follows:

Resistance lower limit R1	Resistance upper limit R2	Resistance upper limit R3
80 mΩ	120 mΩ	160 mΩ
Voltage lower limit V1	Voltage upper limit V2	Voltage upper limit V3
1.40V	1.50 V	1.60 V

2. Sorting result table

Battery	Resistance	Voltage	Sorting Result
1	60 mΩ	1.30 V	R_NG V_NG NG
2	90mΩ	1.45 V	R_P1 V_P1 GD
3	130mΩ	1.55 V	R_P2 V_P2 GD
4	180 mΩ	1.70 V	R_NG V_NG NG

Note: When a measurement error is detected, sort signal is not output.

Comparison mode: 4 ranges

1. Sorting conditions and results relationship

Conditions	Result
R1 ≤ current resistance value < R2	R_P1
R2 ≤ current resistance value < R3	R_P2
R3 ≤ current resistance value ≤ R4	R_P3
current resistance value < R1 or current resistance value > R4	R_NG

V1 ≤ current voltage value < V2	V_P1
V2 ≤ current voltage value < V3	V_P2
V3 ≤ current voltage value ≤ V4	V_P3
current voltage value < V1 or current voltage value > V4	V_NG

Example: Select comparison function turned on, sorting setting is the 4-range sorting, current comparator value is set as follows:

Resistance lower limit	Resistance upper limit R2	Resistance upper limit R3	Resistance upper limit R4
80 mΩ	100 mΩ	120 mΩ	140 mΩ
Voltage lower limit V1	Voltage upper limit V2	Voltage upper limit V3	Voltage upper limit V4
1.40V	1.50 V	1.60 V	1.70 V

2. Sorting result table

Battery	Resistance	Voltage	Sorting Result
1	60 mΩ	1.30 V	R_NG V_NG NG
2	90mΩ	1.45 V	R_P1 V_P1 GD
3	110mΩ	1.55 V	R_P2 V_P2 GD
4	130mΩ	1.65 V	R_P3 V_P3 GD
5	150mΩ	1.75V	R_NG V_NG NG

Note: When a measurement error is detected, sort signal is not

4.3 Beep Mode Setting

After the instrument comparator is turned on or sorted to open output test judgment result, instrument beep mode can be selected.

Beep mode:

OFF ↔ PASS ↔ FAIL

1. Select comparator settings page

Press the [PAGE] key to select COMPARATOR page

2. Select related menu items

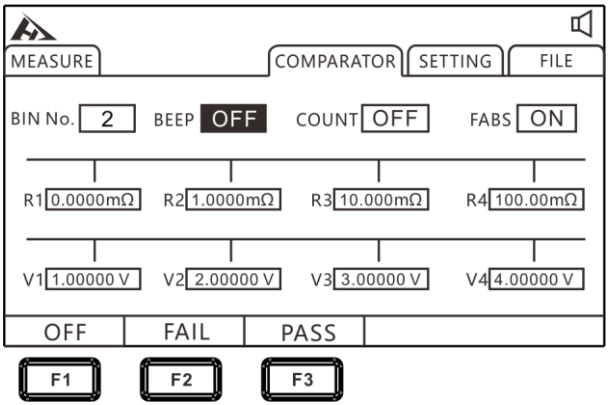

Menu item	Meaning
[OFF]	Sorting beep OFF
[FAIL]	Beep if FAIL
[PASS]	Beep if PASS

4.4 Count Setting

When the instrument comparator is turned on, count is set to ON and the machine will count the range of test results.

1. Select comparator settings page

Press the [PAGE] key to select COMPARATOR page

2. Select related menu items

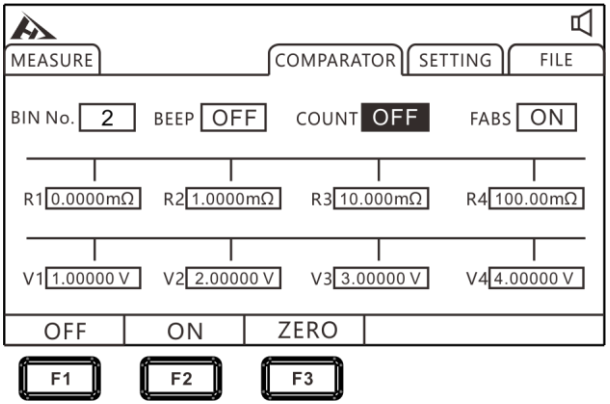

Press [F1] [F2] to turn on/off sorting function, and press [F3] to clear zero the count value. As shown below

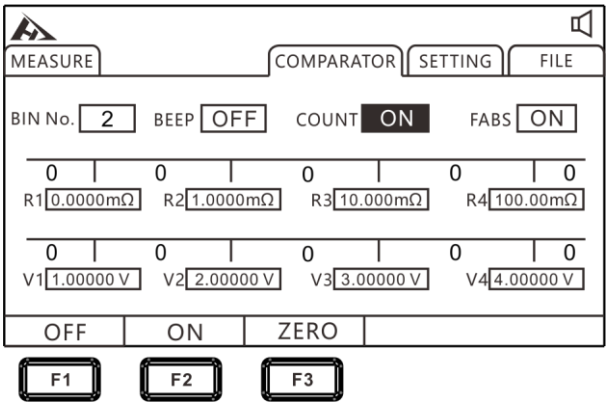

4.5 Absolute Value Setting

The tester provides an absolute value function, which performs absolute value calculation on the test results for comparison and sorting.

1. Select comparator settings page

Press the [PAGE] key to select COMPARATOR page

2. Select related menu items

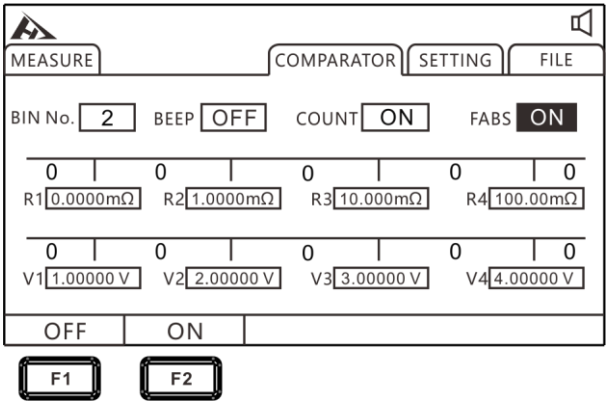

Press [F1] [F2] to turn on/off the absolute value function.

Chapter 5 Measurement

This chapter provides a step-by-step description of the functions used for proper measurement, including start-up settings, range scopes, and protection function startup.

5.1 Start Test

1. Set relevant parameters.
2. Connect test leads correctly.
3. Test begins.

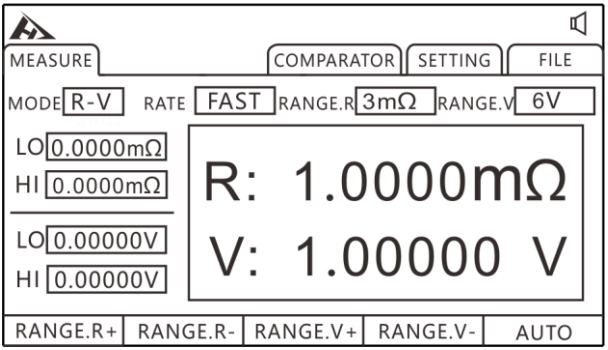

Trigger Mode	Meaning
Internal (INT)	Automatic trigger test inside the instrument
External (EXT)	Trigger test via external EXT IO terminal TRG signal
Manual (MAN)	Manually press [TRG], RS232, LAN port command to trigger the test
Auto (AUT)	Automatically judge the test object and test

5.2 Measured Value Display

The following is the test range. Once the following ranges are exceeded, it will display (------), test current and range are:

Impedance measurement

Resistance range	Test current	Maximum display value	Resolution (Ω)
3mΩ	100mA	3.2000mΩ	0.1μΩ
30mΩ	100mA	32.000mΩ	1μΩ
300mΩ	10mA	320.00mΩ	10μΩ

3Ω	1mA	3.2000Ω	100μΩ
30Ω	100uA	32.000Ω	1mΩ
300Ω	10uA	320.00Ω	10mΩ
3kΩ	10uA	3.2000kΩ	100mΩ

Voltage Measurement

Range	Max. Display Value	Resolution
6V	±6.00000V	10uV
60V	±60.000V	100uV

5.3 Perform Clear Zero

Please perform zero adjustment in the following cases. (Can cancel the resistance below ±3%f.s. for each range)

- When residual display content occurs due to effects such as electromotive force
- When replacing 4-terminal test leads
- The test value is not normal
- Test environment temperature and humidity change

- After the clear zero has been made, if ambient temperature is changed or the test line is changed, please perform clear zero again.
- Perform clear zero for all ranges used. In the manual range, the zero adjustment is performed only in the current range; in the automatic range, clear zero is adjusted for all ranges.
- If the resistance is measured to be smaller than the resistance at zero, the measured value is negative.

Example: Connect a 1mΩ resistor at 300mΩ range and set it to zero. After the clearing is completed, if it is short-circuited again, -1mΩ is displayed.

1. Short circuit test line

9363-A　Clip type test leads 9363-A

Correct

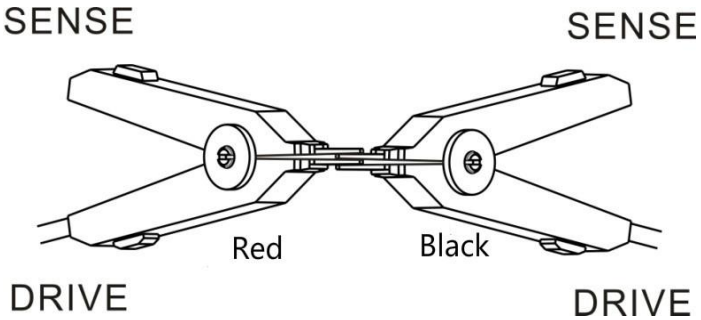

Wrong

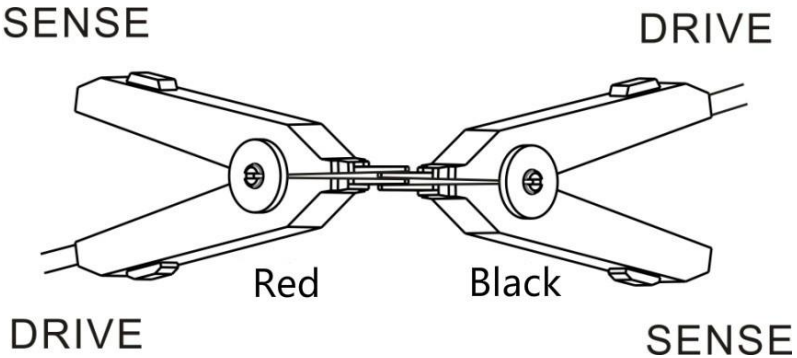

939363-B　Probe type test leads 9363-B

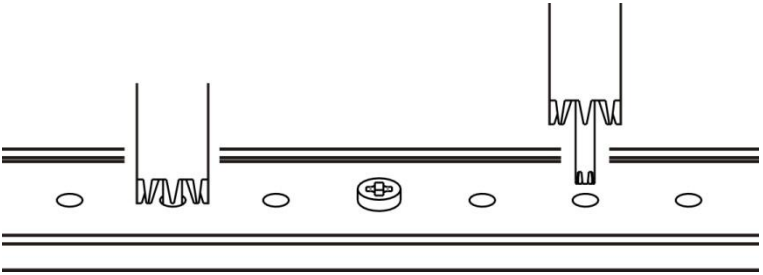

2. Confirm that the measured value is within ±50%f.s.

If measured value is not displayed, check that the test leads are connected correctly.

When the wiring is correctly connected:

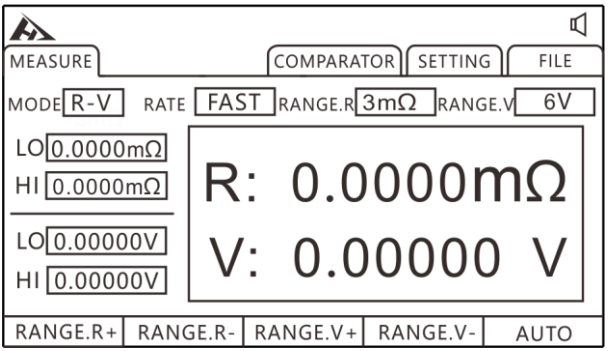

When the wiring is wrongly connected:

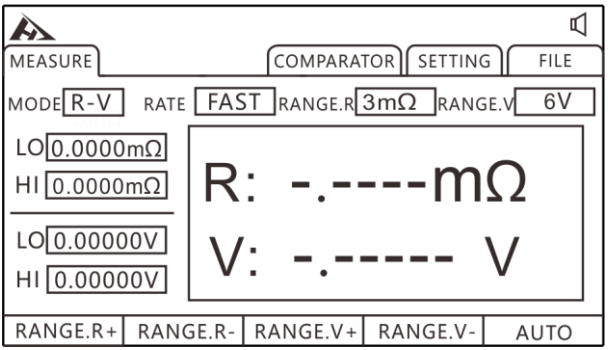

3. Clear Zero

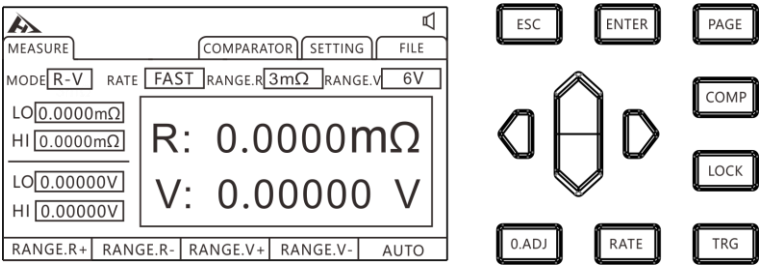

After clamping the test clip or pressing the test lead, press [O.ADJ] key, the prompt of clear zero command will be executed, then press [ENTER] key to perform zero adjustment. Press [ESC] to suspend clearing zero.

4. After zero adjustment

If clear zero is successful, the icon will be displayed in the middle of the display measurement and then return to measurement state. If clear zero failed, the icon is not displayed, the measurement state is returned.

Zero adjustment failed

When zero adjustment is not possible, it may be that the measured value before zero adjustment exceeds ±3% of the full scale of each range, or it is in a test abnormal state. Please make the correct wiring again and re-zero. Due to the resistance value of a self-made cable is high, it cannot be zeroed, please reduce the wiring resistance.

> Tip:
> When the zero adjustment fails, the zero adjustment of the current range will be released.

Chapter 6 Measurement Panel Save

All measurement conditions can be saved, retrieved or deleted in the form of files. Press [PAGE] to enter file page.

Press the [PAGE] key to select FILE page

After entering this page, pressing up and down keys, users can refer to the saved record, users can also make performing of save, load, clear and rename the current record.

6.1 Save Panel Setting

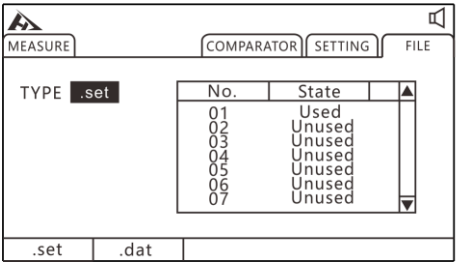

Press up, down, left and right keys to select the menu item to set

Use up and down keys to view current settings and press the [F1] key to save the current settings. A total of 30 sets of test setup conditions can be saved to facilitate fast switching settings for different products.

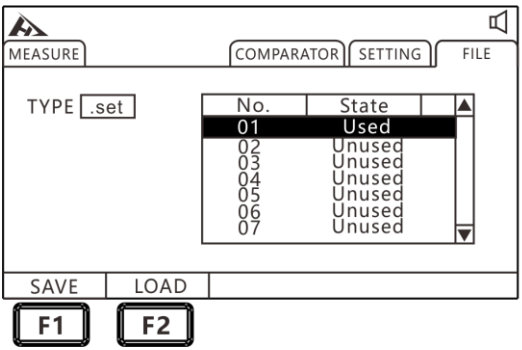

Press [F1] to save the parameters to the selected file.

6.2 Retrieve Measuring Setting

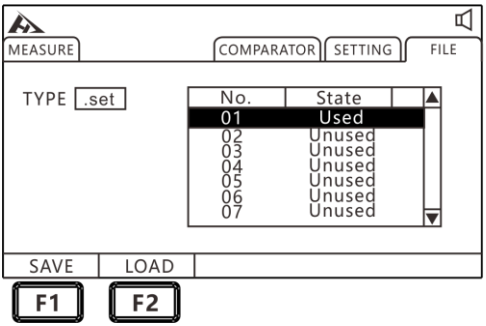

F2

Press [F2] to load the saved parameters

Use up and down keys to view the current settings, press F2 load key to retrieve the current settings.

6.3 Save Measurement Data Settings

In the other trigger mode except INT mode, open the saved data, then the test data will be saved to the machine in order, a total of 15 files can be saved, each file can save 400 sets of test data.

1. Select file settings page

PAGE

Press the [PAGE] key to select FILE page

2. Select related menu items

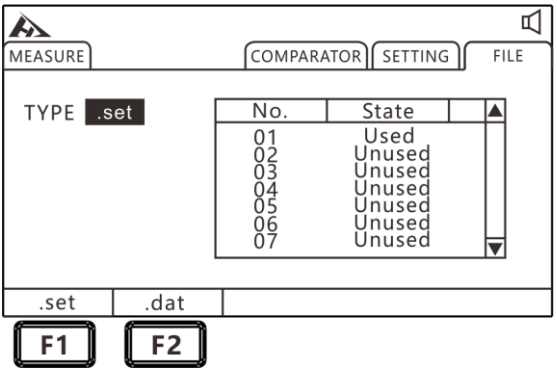

F2

Press [F2] to File save page

2. Open data save function

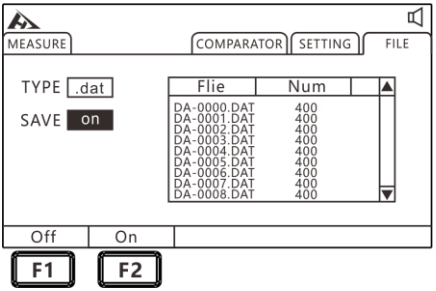

F2

Press [F2] to start saveing data except for INT trigger mode

6.4 Save Measurement Data Export

Use parsing software on your computer to export data to the format needed.

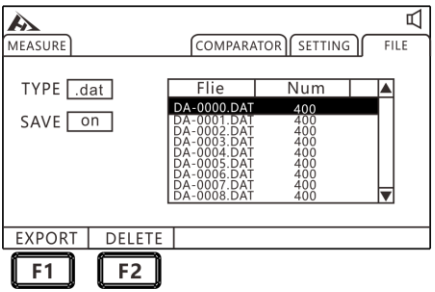

F1 F2

Press [F2] to open the save data and press [F1] to export the selected data to the U disk. Press the [F2] key to delete the selected data.

Chapter 7 EXT I/O Port (Handler)

EXT I / O terminal on the rear panel of the instrument supports external control, provides output for test and comparison judgment signals, and accepts the input TRG signal. All signals use an optocoupler. Understanding the internal circuit structure and safety considerations through the instrument panel settings facilitates better connection control systems

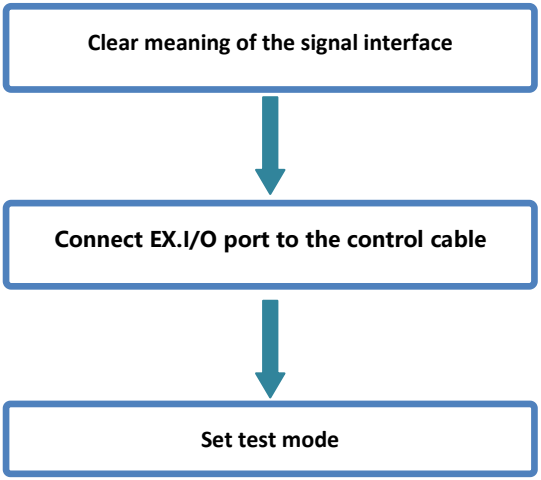

7.1 EXT I/O Terminal and Signal

In this section, users will learn about the connection and introduction of EXT I/O.

Do not plug or unplug EXT I/O ports during testing

Do not connect the IO port to test terminal

Input terminal schematic

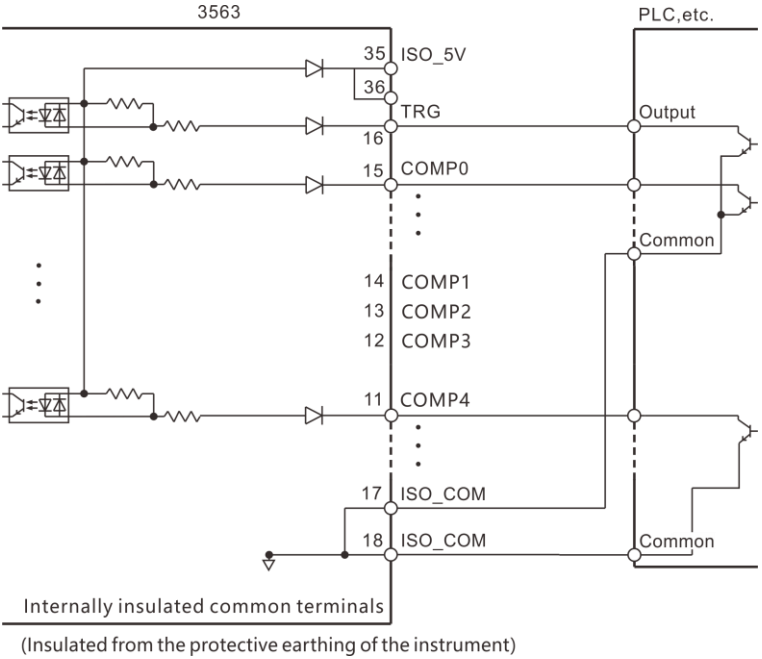

Output terminal schematic

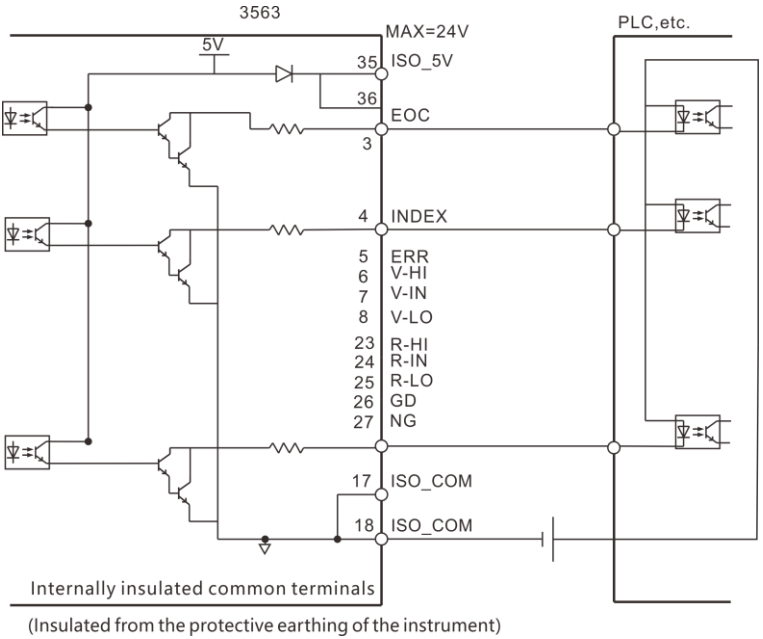

7.1.1 Port Signal Description

Port and signal description

EXT I/O port connector uses the D-SUB female terminal of the 36-PIN pin.

Figure:

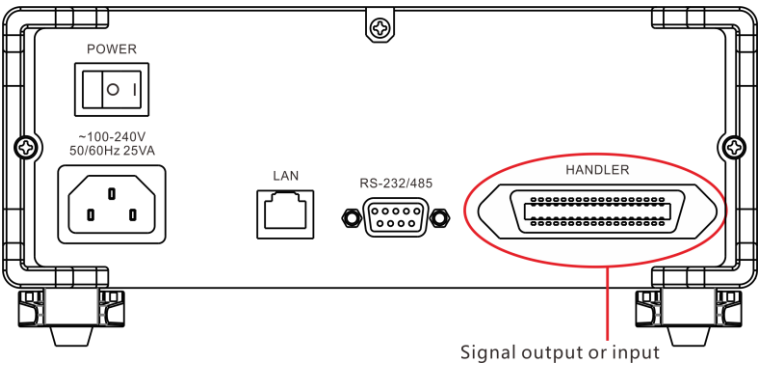

Detailed picture for port:

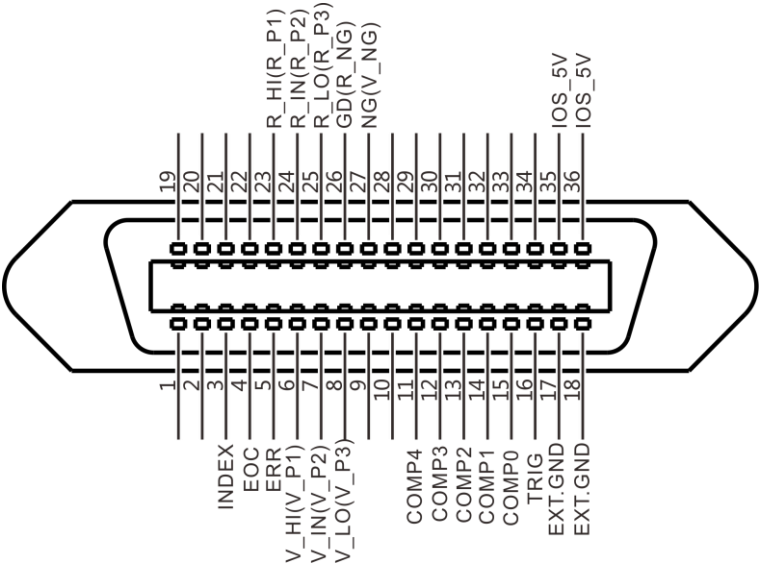

(terminal for instrument)

Power supply terminal

No.	Terminal Name	Meaning
17	EXT.GND	Isolated signal ground (user power ground)
18		
35	ISO_5V	Isolated 5V power output
36		

Compare output signal

3	INDEX	Sampling completion signal
4	EOC	Test completion signal (busy signal)
5	ERR	Abnormal measurement error output
26	GD(R_NG)	Second-range sorting comparator qualified

		output Third and fourth ranges are not qualified for output
27	NG(V_NG)	Second-range sorting comparator failed output 3rd and 4th range sorting comparison voltage unqualified output
6	V_HI(V_P1)	Second-range sorting comparison overvoltage (unqualified) output Third- and fourth-range sorting comparison voltage first-class output
7	V_IN(V_P2)	Second range sorting comparison voltage qualified output Third and fourth range sorting comparison voltage second-class product output
8	V_LO(V_P3)	Second range sorting comparison under voltage (unqualified) output Third- and fourth range sorting comparison voltage third-class output
23	R_HI(R_P1)	Second-range sorting comparison over resistance (unqualified) output Third- and fourth-range sorting comparison resistance first-class output
24	R_IN(R_P2)	Second range sorting comparison resistance output Third and fourth range sorting comparison resistance second-class product output
25	R_LO(R_P3)	Second range sorting comparison under resistance (unqualified) output Third and fourth range sorting comparison resistance third-class product output

External control signal input

15	Comp 0	The comparator records the file selection end. Optional file 1~30.
14	Comp 1	
13	Comp 2	
12	Comp 3	
11	Comp 4	
16	Trig	Test trigger terminal

Comparator record selection table

COMP 4-0	Record number	COMP 4-0	Record number	COMP 4-0	Record number	COMP 4-0	Record number
11111	constant	10111	8	01111	16	00111	24
11110	1	10110	9	01110	17	00110	25
11101	2	10101	10	01101	18	00101	26
11100	3	10100	11	01100	19	00100	27
11011	4	10011	12	01011	20	00011	28
11010	5	10010	13	01010	21	00010	29
11001	6	10001	14	01001	22	00001	30
11000	7	10000	15	01000	23	00000	不变

Note: To avoid damage to the interface, do not exceed the power supply voltage requirements.

To avoid damage to the interface, wire the instrument after it has been turned off.

If the output signal is used by the user to control the relay, the relay must use a reverse energy release diode.

7.1.2 Port Signal Connection Method

Electrical performance parameter

Isolated power output: +4.8~5.3VDC

The maximum output current is 100mA.

Output signal: Optocoupler isolation strap driver chip.

The maximum load voltage is 30V.

Maximum output current: 50mA.

Input signal: Optical isolation.

Low level active.

Maximum current: 50mA.

Input circuit connection

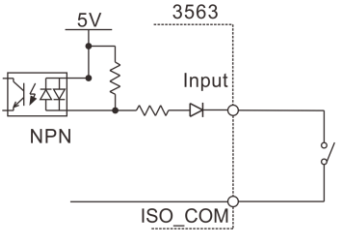

Switched input

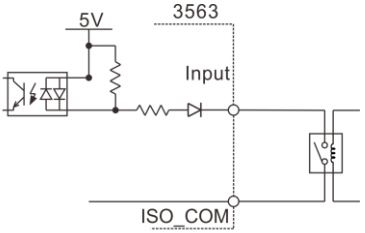

Relay input

Output circuit connection

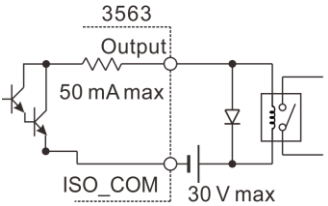

Driving relay

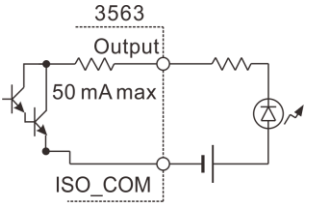

Driving LED Light

7.2 Timing Diagram

The level of each signal indicates the ON/OFF state of the contact, upper bar indicates that the low level is active.

7.2.1 Timing Diagram for External Trigger

External trigger [EXT] setting (I/O output mode is hold)

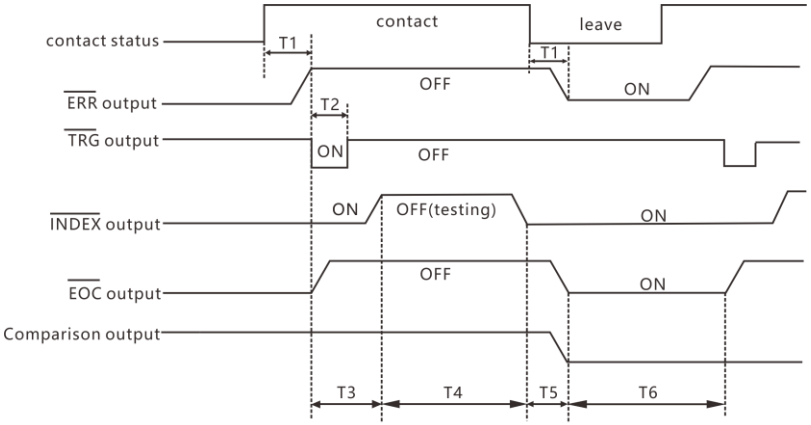

T1: 1.5mS ERR output response time

T2: Minimum 0.5ms descent edge trigger

T3: Delay time

T4: Minimum 8.6mS(measurement time)

T5: 0.5mS operation time

T6: Hold until the next trigger

Note: ERR (low) test is abnormal, ERR (low) test is normal.

	Item	Time
T1	ERR output response time	1.5mS$_{MAX}$
T2	TRG, Signal pulse width	5mS$_{MIN}$
T3	Delay time	5mS$_{MAX}$ + Measurement delay
T4	ADC Sampling time (R-V mode)	Ultra 8.6mS Fast 18mS Medium 44mS Slow 288mS
T5	Data processing display time	1mS$_{MAX}$

7.2.2 Read Process During External Trigger

The following shows the process from the start of measurement to the measurement value when using external trigger.

The EOC signal is output immediately after the instrument determines the judgment result (HI, IN, LOW, ER, GD, NG). When the response of the controller input circuit is slow, it takes a wait time from detecting the ON of the EOC signal to reading the determination result.

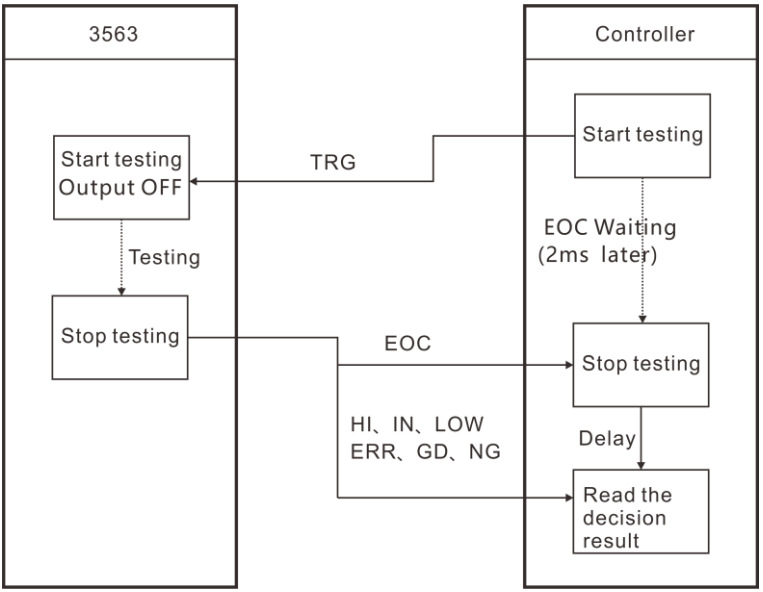

Chapter 8 Communication

The instrument provides three communication modes, RS232C, RS485, LAN (TCP protocol using Ethernet protocol) communication mode. The instrument provides two communication protocols, SCPI and MODBUS. Communication protocols refer to the instruction commands on the CD.

Do not connect communication port to the test port, as this will damage the instrument.

8.1 RS232 Communication Mode

RS232 communication method uses 3-wire communication.

8.1.1 Interface and Cable

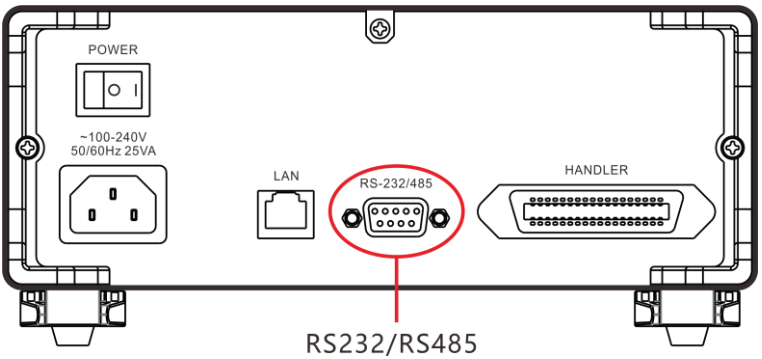

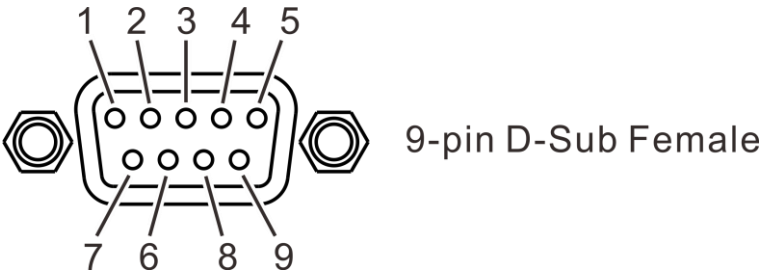

8.1.2 RS232 Connection Method

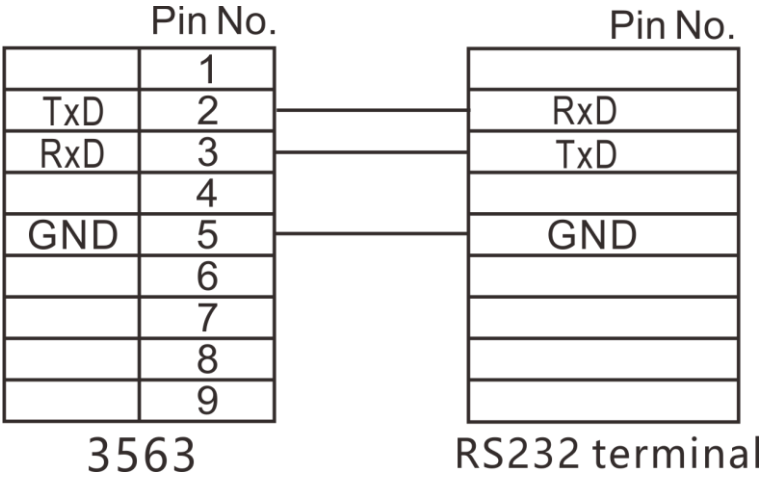

8.1.3 RS232 Communication Setting

1. Select communication page

Press the [PAGE] key to select Parameter setting page

2. Select RS232 communication mode

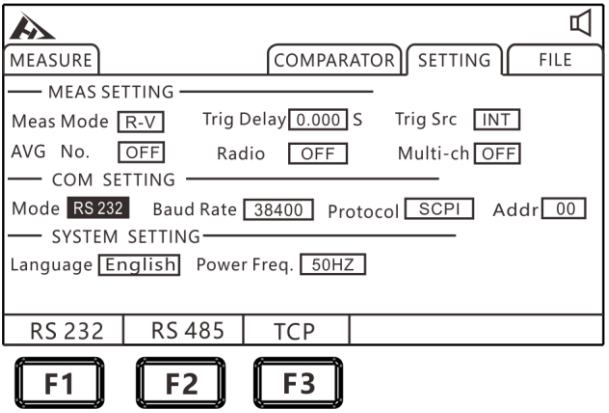

3. Select communication baud rate

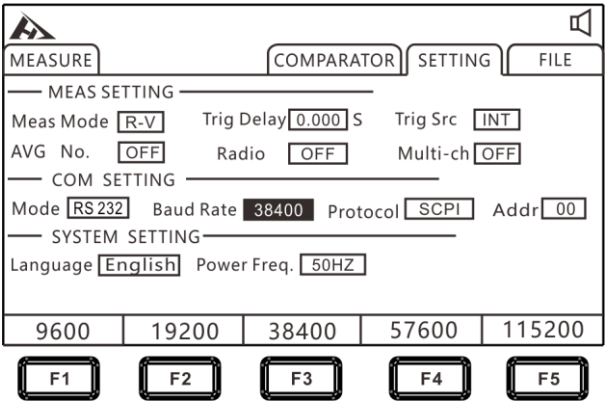

3. Select communication protocol

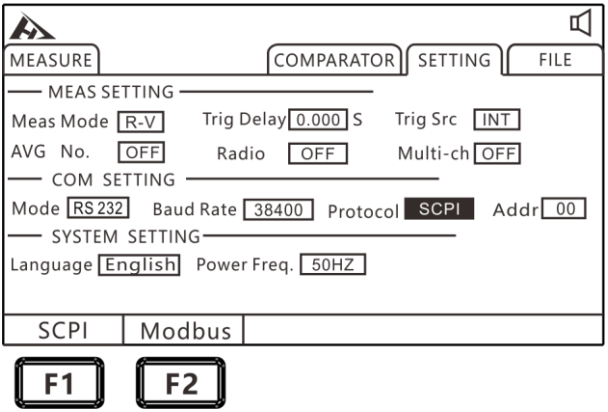

8.2 RS485 Communication Method

8.2.1 RS485 Connection Method

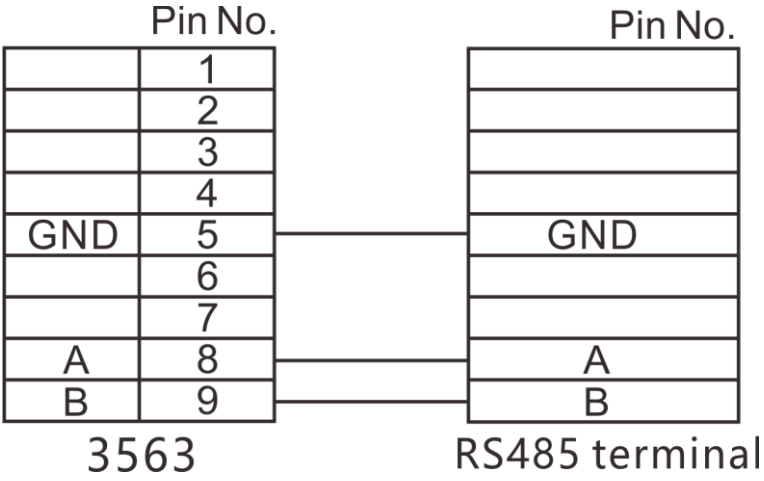

8.2.2 RS485 Communication Setting

1. Select communication page

Press the [PAGE] key to select Parameter setting page

2. Select RS485 communication mode

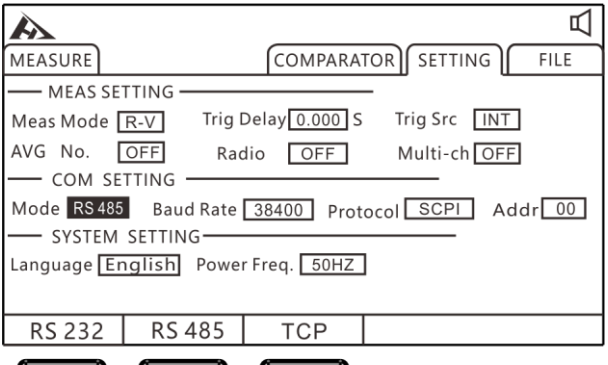

3. Select communication baud rate

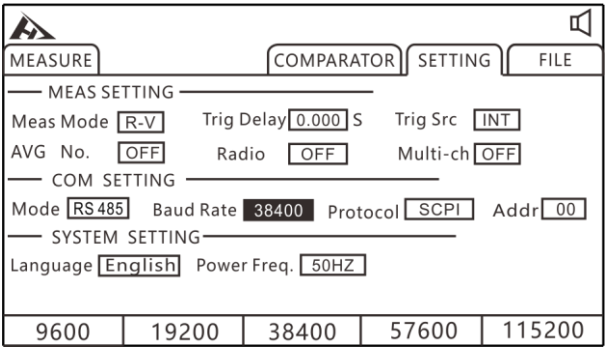

4. IP setting

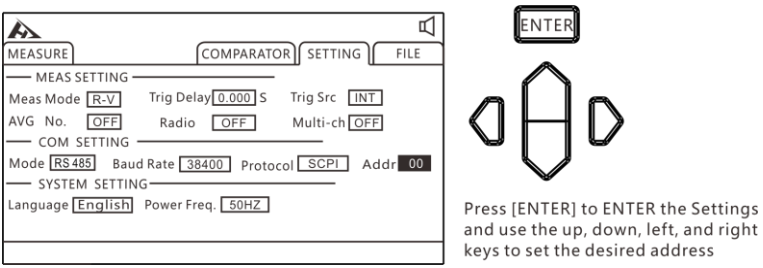

8.3 LAN Communication Method

LAN port communication uses TCP protocol communication.

8.3.1 Interface and Cable

Ethernet interface uses the standard RJ45 port, and cable uses Category 5 of Internet cable.

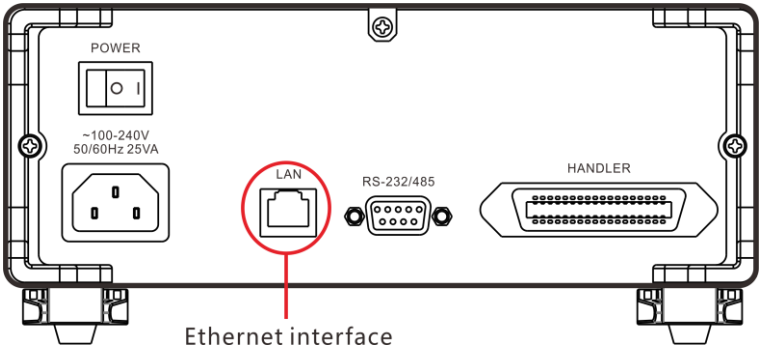

8.3.2 LAN Connection Method

Instrument and computer connection

When the instrument is connected to a computer, network cable uses a crossover cable.

A termination method uses the 568B standard:

Orange white	Orange	Green white	Blue	Blue white	Green	Gray white	Gray

B termination method uses the 568A standard:

Gray white	Green	Orange white	Blue	Blue white	Orange	Gray white	Gray

Instrument and router connection

When the instrument is connected to a router, network cable is directly connected.

Both terminals use the 568B standard:

Orange white	Orange	Green white	Blue	Blue white	Green	Gray white	Gray

8.3.3 LAN Communication Setting

1. Select communication page

Press the [PAGE] key to select Parameter setting page

2. Select TCP communication mode

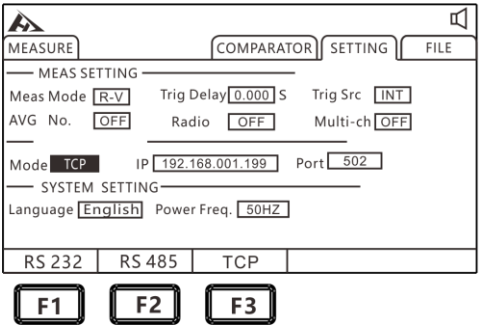

Press up, down, left, and right to select the menu item to set

3. Set communication IP

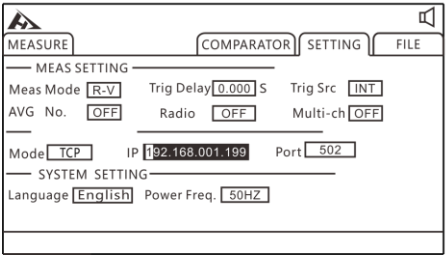

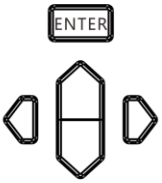

Press [ENTER] to ENTER the Settings
Press up, down, left and right keys to set the value

8.4 USB Interface

The front panel of the instrument has a USB interface and is used as a HOST function. It is used to upgrade programs and save data or settings after inserting a USB flash drive.

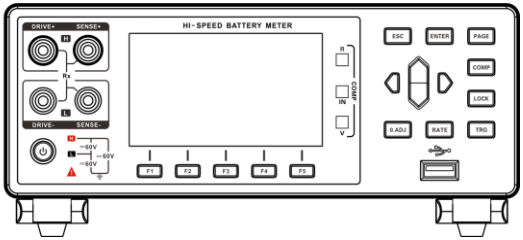

Chapter 9 Parameter

9.1 General Parameters

General functions:

Parameter	DC voltage, AC resistance
Measuring Range	Resistance: 0.1μΩ ~ 3KΩ Voltage: 10μV~60V; 300V; 800V
Test Speed (MAX) **Auto Trigger**	Ultra 100t/s, Fast 50t/s, Medium 20t/s, Slow 3t/s
Maximum Output Current	100mA
Range Over Display	Over Range "-------"
Input Terminal	Banana plug
Operation Key	Rubber key
Display	3.5 inches TFT
Precision Guarantee Period	1 year
Operating Temperature and Humidity	0℃~40℃ <80%RH (No condensation)
Storage Temperature and Humidity	-10℃~60℃ <80%RH (No condensation)
Operating Environment	Indoor, the highest altitude is 2000m
Power Supply	Voltage: 100V ~ 240V AC frequency: 50Hz/60Hz
Power Consumption	10 W

Size	Approx. 325 mm x 215 mm x 96 mm
Weight	Approx. 2kg

9.2 Accuracy

Test conditions:

Temperature: 20±3°C

Humidity: <80% RH

Warm-up time more than 15 minutes

Calibration validity: 1 year

Resistance measurement accuracy:

Range		Max. Reading	Accuracy (±%rdg±dgt)	Resolution	Test Current
1	3mΩ	3.2000mΩ	0.5±10	0.1μΩ	100mA
2	30mΩ	32.000mΩ	0.5±5	1μΩ	100mA
3	300mΩ	320.00mΩ	0.3±5	10μΩ	10mA
4	3Ω	3.2000 Ω	0.3±5	100μΩ	1mA
5	30Ω	32.000 Ω	0.3±5	1 mΩ	100μA
6	300Ω	320.00 Ω	0.3±5	10 mΩ	10μA
7	3kΩ	3100.0Ω	0.3±5	100 mΩ	10μA

1: Measuring current error within ±10%

2: Add ±3dgt at ultra speed, add ±2dgt at fast speed, add ±2dgt at medium speed.

3: Add ±30dgt at ultra speed, add ±10dgt at fast speed, add ±5dgt at medium speed. (3mΩ bin)

Voltage measurement accuracy:

Range		Max. Reading	Accuracy (±%rdg±dgt)	Resolution
1	6V	±6.00000V	0.01%rdg+3dgt	10μV
2	60V	±60.0000V	0.01%rdg+3dgt	100μV

1: Add ±3dgt at ultra speed, add ±2dgt at fast speed, add ±2dgt at medium speed

2: Voltage measurement 3563A can test up to 300V, 3563B can test up to 800V.

Chapter 10 Communication Commands

10.1 General Commands

There are two types of instrument commands: common commands and SCPI (programmable instrument standard commands) commands. Common commands are defined by the IEEE488.2-1987 standard. These commands apply to all instrumentation, but the instrument does not support all common commands. SCPI commands are tree structured.

1. *IDN? instruction

Function: Query version number

Example:

Send: *IDN?

Back: 3563, V1.0

2. *TRG

Function: Bus trigger command, available when set to bus trigger

Returns: resistance value, voltage value (multiple function off)

Resistance value, voltage value, channel number (multi-channel function is enabled)

Example: See FETCH instruction

3. TRG

Function: Bus trigger command, if not bus trigger automatically changed to bus trigger.

Returns: resistance value, voltage value (multiple function off)

Resistance value, voltage value, channel number (multi-channel

function is enabled)

Example: See FETCH commands

10.2 SCPI Command Structure

The top of the tree structure is the root command, or root. If users want to reach the low-level commands, must follow specific path to arrive.

Command terminator: The terminator of the command input, such as NL (newline, ASCII code is 10).

Colon (:): The colon is the level of a command, indicating the next level of the entry command.

Semicolon (;): A semicolon indicates the start of multiple commands.

Question mark (?): The question mark indicates a query.

Comma (,): A comma is a separator for multiple parameters.

Spaces ( ): Spaces are separators for commands and parameters.

Figure 6.1 shows how to reach a lower level instruction by using colons and semicolons.

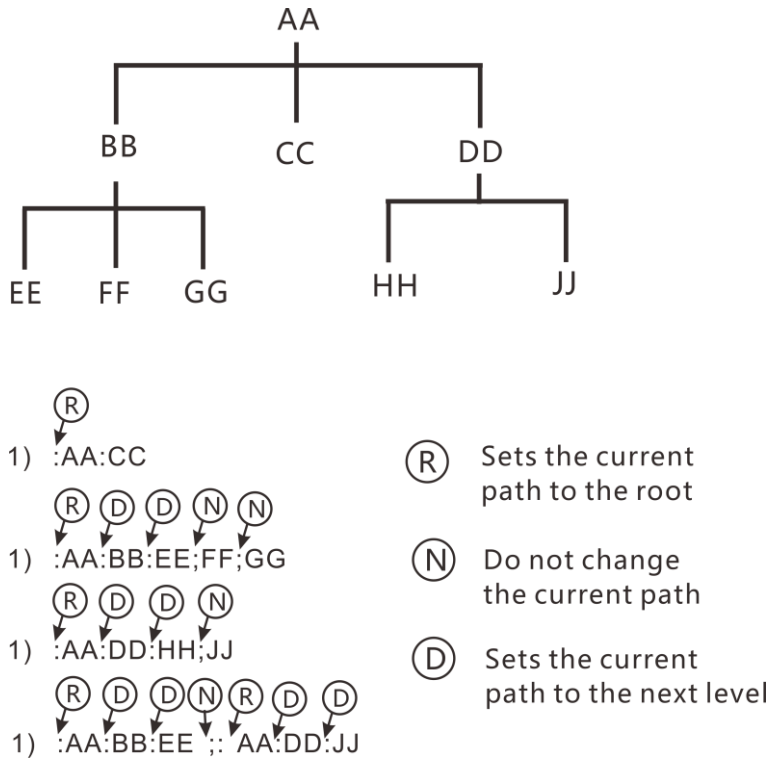

Figure 1.1 SCPI instruction tree structure

10.3 SCPI Sub-command System

1. :FUNCtion {RV|RES|VOLT}

Function: Set or query test mode

Response: RV, RES, VOLT

Note: RV voltage resistance test function

RES resistance test function

VOLT voltage test function

Example: Setting the test mode

Query: :FUNCtion RV

Example: Query test mode

Query: :FUNCtion?

Response: RV

2. :RESistance:RANGe {<numeric_value>}

Function: set or query the resistance range

Response: numeric, range 0-6

Example: The current range is set to 5 ranges

Query: :RESistance:RANGe 5

Example: Ask the current range

Query: :RESistance:RANGe?

Response: 5

3. :VOLTage: RANGe {0|1|2}

Function: set or query the voltage range

Response: 0-2

Example: The current range is set to 1 range

Query: :VOLTage:RANGe 1

Example: Ask the current range

Query: :VOLTage:RANGe?

Response: 1

4. :AUTorange {0|1|OFF|ON}

Function: set or query range automatically

Response: 0 off, 1 on

Example: automatic range setting

Query: :AUTorange OFF

Response: 0 off, 1 on

Example: Ask the current range automatically

Query: :AUTorange?

Response: 0

5. :SAMPle:RATE {EX|FAST|MEDium|SLOW}

Function: set or query the sampling rate

Response: FAST fast, MED medium speed, SLOW slow

Example: Setting the sampling rate

Query: :SAMPle:RATE OFF

Response: 0 off, 1 on

Example: Query the sampling rate

Query: :SAMPle:RATE?

Response: SLOW

6. :CALCulate:AVERage:STATe{0|1|OFF|ON}

Function: Set or query whether the average function is enabled

Response: 0 off, 1 on

Example: Ask if the average function is on

Query: :CALCulate:AVERage:STATe?

Response: 0

7. :CALCulate:AVERage {<numeric_value>}

Function: set or query the average number of times

Response: 2-16

Example: Average number of queries

Query: :CALCulate:AVERage?

Response: 2

Example: Set the average number of times

Response: :CALCulate:AVERage 5

8. :CALCulate:LIMit:STATe {0|1|OFF|ON}

Function: Set or query whether the comparator is turned on

Response: 0 off, 1 on

Example: Query whether the comparator is turned on

Query: :CALCulate:LIMit:STATe?

Response: 0

Example: Setting the comparator to turn on

Query: :CALCulate:LIMit:STATe ON

9. :CALCulate:LIMit:BIN {2|3|4}

Function: Set or query the number of comparator sorting bins

Response: 2 upper and lower limit sorting, 3 third bin sorting, 4 fourth bin sorting

Example: Query Comparator Sorting Number of Bins

Query: :CALCulate:LIMit:BIN?

Response: 2

Example: Set the number of comparator sorting Bins

Query: :CALCulate:LIMit:BIN 2

10. :CALCulate:LIMit:BEEPer {OFF|HL|IN}

Function: Set or query the comparator beep output

Response: OFF beep is off, HL NG beep, IN PASS beep

Example: Query comparator output

Query: :CALCulate:LIMit:BEEPer?

Response: OFF

Example: setting the comparator beep output

Query: :CALCulate:LIMit:BEEPer HL

11.:CALCulate:LIMit:RESistance:UPPer {1|2|3|4},{<numeric_value>}

Function: Set or query comparator resistance upper limit value

Response: <numeric_value>

Example: Setting the comparator resistance upper limit value 1

Query: :CALCulate:LIMit:RESistance:UPPer 1,1e1

Example: Query comparator resistance upper limit value 1

Query: :CALCulate:LIMit:RESistance:UPPer? 1

Response: 1.0000e1

12.:CALCulate:LIMit:RESistance:LOWer {1|2|3|4},{<numeric_value>}

Function: Set or query comparator resistance lower limit value

Response: <numeric_value>

Example: Setting comparator resistance lower limit value 1

Query::CALCulate:LIMit:RESistance:LOWer 1,1e-1

Example: Query the lower limit of the comparator resistance 1

Query::CALCulate:LIMit:RESistance: LOWer? 1

Response: 1.0000e-1

13.:CALCulate:LIMit:VOLTage:UPPer {1|2|3|4},{<numeric_value>}

Function: Set or query the comparator voltage upper limit value

Response: <numeric_value>

Example: Setting the comparator voltage upper limit value 1

Query::CALCulate:LIMit:VOLTage:UPPer 1,10

Example: Query comparator voltage upper limit value 1

Query::CALCulate:LIMit:VOLTage:UPPer? 1

Response: 10.0000

14.:CALCulate:LIMit:VOLTage: LOWer {1|2|3|4},{<numeric_value>}

Function: Set or query the comparator voltage lower limit value

Response: <numeric_value>

Example: Setting the comparator voltage lower limit value 1

Query::CALCulate:LIMit:VOLTage: LOWer 1,1

Example: Query the comparator voltage lower limit value 1

Query::CALCulate:LIMit:VOLTage: LOWer? 1

Response: 1.00000

15 :SYSTem:LFRequence

Function: Set or query the power frequency

Response: 50,60

Example: Query power frequency

Query::SYSTem:LFRequence?

Response: 50

Example: setting the power frequency

Query::SYSTem:LFRequence 50

16 :SYSTem:SAVE

Function: Save current test mode, test speed, test range, trigger delay, comparator setting information

17 :SYSTem:LOAD

Function: Load saved test mode, test speed, test range, trigger delay, comparator setting information

18 :TRIGger:SOURce

Function: Set or query the trigger source

Response: INT, MAN, EXT, AUT

Example: Setting the trigger source

Query::TRIGger:SOURce INT

Example: Query trigger source

Query::TRIGger:SOURce?

Response: INT

19 :TRIG:DELay

Function: Set or query the trigger delay

Response: 0 to 9.999

Example: Setting the trigger delay

Query::TRIG:DELay 1

Example: Query trigger delay

Query::TRIG:DELay?

Response: 1

20 :FETCh?

Function: Response test results

When the multiplex function is turned off, return format is:

ΩV mode returns <Resistance value>, <Voltage value>

Ω mode returns <Resistance value>,

V mode returns <Voltage value>

When the multiplex function is turned on, return format is:

ΩV mode returns <Resistance value>, <Voltage value>, <N>

Ω mode returns <Resistance value>, <N>

V mode returns <Voltage value>, <N>

Measuring resistance value data format

No.	Range	Normal test value	Over range	Measurement failure
1	3mΩ	±□□.□□□□E-3	±10.0000E+8	±10.0000E+9
2	30mΩ	±□□□.□□□E-3	±100.000E+7	±100.000E+8
3	300mΩ	±□□□□.□□E-3	±1000.00E+6	±1000.00E+7
4	3Ω	±□□.□□□□E+0	±10.0000E+8	±10.0000E+9
5	30Ω	±□□□.□□□E+0	±100.000E+7	±100.000E+8
6	300Ω	±□□□□.□□E+0	±1000.00E+6	±1000.00E+7
7	3000Ω	±□□.□□□□E+3	±10.0000E+8	±10.0000E+9

Measuring voltage value data format

No.	Range	Normal test value	Over range	Measurement failure
1	6V	±□.□□□□□E+0	±1.00000E+9	±1000.00E+7
2	60V	±□□.□□□□E+0	±10.0000E+8	±10.0000E+9

Channel number value data format

0~99

Chapter 11 MODBUS Communication Commands

The communication protocol uses MODBUS format and mode uses RTU. That is, 3.5 stop bits are used as the start and stop bits. The time between each byte of data does not exceed 1.5 stop bits. Select serial port type (Rs232/Rs485) and set communication baud rate of the instrument to be the same as that of the host computer. Serial communication format: 8 bits of data bit, 1 bit of stop bit, no hardware handshake.

11.1 Register Overview

11.1.1 Holding Register

Name	Address	Value
Test function	0x0001	R:0x0000,V:0x0001, RV:0x0002
Resistance range	0x0002	0x0000-0x0006
Voltage range	0x0003	0x0000-0x0002
Range automatic	0x0004	ON:0x0001, OFF:0x0000
Sampling rate	0x0005	EX:0x0000,FAST:0x0001, MED:0x0002, SLOW:0x0003
Average number of times	0x0006	0x0001-0x0010
Comparator switch	0x0007	ON:0x0001, OFF:0x0000
Comparator bin	0x0008	0x0002-0x0004
Comparator beep	0x0009	OFF:0x0000,HL:0x0001, IN:0x0002
Trigger source	0x000A	0x0000-0x0003: INT MAN, EXT, BUS
Trigger delay	0x000B	0-9999
Resistance upper limit value 1H	0x000C	IEEE32 format
Resistance upper limit value 1L	0x000D	IEEE32 format
Resistance upper limit value 2H	0x000E	IEEE32 format
Resistance upper limit value 2L	0x000F	IEEE32 format
Resistance upper limit value 3H	0x0010	IEEE32 format
Resistance upper limit value 3L	0x0011	IEEE32 format
Resistance upper limit value 4H	0x0012	IEEE32 format
Resistance upper limit value 4L	0x0013	IEEE32 format

Voltage upper limit value 1H	0x0014	IEEE32 format
Voltage upper limit value 1L	0x0015	IEEE32 format
Voltage upper limit value 2H	0x0016	IEEE32 format
Voltage upper limit value 2L	0x0017	IEEE32 format
Voltage upper limit value 3H	0x0018	IEEE32 format
Voltage upper limit value 3L	0x0019	IEEE32 format
Voltage upper limit value 4H	0x001A	IEEE32 format
Voltage upper limit value 4L	0x001B	IEEE32 format
Clear zero	0x0020	1： Clear zero

11.1.2 Input Register

Name	Address	Value
Resistance value H	0x1001	IEEE32 Floating point format
Resistance value L	0x1002	IEEE32 Floating point format
Voltage value H	0x1003	IEEE32 Floating point format
Voltage value L	0x1004	IEEE32 Floating point format
Resistance measurement result	0x1005	IEEE32 Floating point format
Voltage measurement result	0x1006	IEEE32 Floating point format

Description of the measurement results:

0：OFF 1：IN 2：HI 3：LO

11.2 MODBUS Commands

11.2.1 （0x03）Read hold register commands

Request frame		
Address code	0x01~0xFF	1 byte
Command code	0x03	1 byte
Start register address		2 byte
Number of registers		2 byte
CRC verification code		2 byte

Normal response frame		
Address code	0x01~0xFF	1 byte
Command code	0x03	1 byte
Number of bytes		1 byte
Input register		n byte
CRC verification code		2 byte

Abnormal response frame		
Address code	0x01~0xFF	1 byte
Abnormal code	083	1 byte
Error code	01-04	1 byte
CRC verification code		2 byte

Example:

Read the instrument's resistance range + voltage range (instrument address is 01)

Query: 01 03 0002 0002 65CB

Instrument response: 010304000400017A32

The instrument has resistance range of 0004 and voltage range of 0001.

11.2.2 Read input register commands（0x04）

Request frame

Address code	0x01~0xFF	1 byte
Command code	0x04	1 byte
Start register address		2 byte
Number of registers		2 byte
CRC verification code		2 byte

Normal response frame		
Address code	0x01~0xFF	1 byte
Command code	0x04	1 byte
Number of bytes		1 byte
Input register		n byte
CRC verification code		2 byte

Abnormal response frame		
Address code	0x01~0xFF	1 byte
Abnormal code	084	1 byte
Error code	01-04	1 byte
CRC verification code		2 byte

Example:

Read resistance and voltage values from the instrument test

Query: 01 04 1001 0004 A4C9

Instrument response: 010408E7D49B3E260A9D3FC98A

The resistance value of the instrument is 0.304Ω, and voltage value is 1.2269.

Note: The data returned by the instrument is in IEEE format. Related IEEE format refer to appendix.

11.2.3 Write register commands (0x10)

Request frame

Address code	0x01~0xFF	1 byte
Command code	0x10	1 byte
Start register address		2 byte
Number of registers		2 byte
Number of bytes		1 byte
Register value		N byte
CRC verification code		2 byte

Normal response frame		
Address code	0x01~0xFF	1 byte
Command code	0x10	1 byte
Number of bytes		2 byte
Input register		2 byte
CRC verification code		2 byte

Abnormal response frame		
Address code	0x01~0xFF	1 byte
Abnormal code	0x90	1 byte
Error code	01-04	1 byte
CRC verification code		2 byte

Example:

Set resistance range of the instrument to 10mΩ + voltage range 60V (instrument address is 01)

Query: 01 10 0002 0002 0001 0001 E276

Instrument response: 011000020002E008

Instrument setup is successful

11.2.4 Trigger instrument test command (0x74)

Request frame

Address code	0x01~0xFF	1 byte
Command code	0x74	1 byte
CRC verification code		2 byte

Normal response frame		
Address code	0x01~0xFF	1 byte
Command code	0x74	1 byte
Number of bytes		1 byte
Input register		n byte
CRC verification code		2 byte

Example:

Read resistance and voltage values from the instrument test

Query: 01 74 00 07

Instrument response: 017408E7D49B3E260A9D3FC98A

The resistance value of the instrument is 0.304Ω, and voltage value is 1.2269.

Appendix: Presentation format for IEEE32 floating point number and signed integer data

IEEE32 is a floating point number representation method developed by the International Electrotechnical Commission. The main content is to use 4 bytes to represent floating point numbers. The negative range of data that can be represented is -2*2128~-2-127, 2-127~2*2128 . As shown in the figure below, the highest bit (bit31) represents the sign bit of the floating point number (0 is positive, 1 is negative); the bit 30-bit23 represents the order of the floating point number (base 2), the value range is 0- FF (hexadecimal), with 7F indicating that order code is 0, 80 indicates that the order code is 1, 7E indicates that the order code is -1, and so on. Bit22-bit0 represents the fractional part of the mantissa of the floating point number, and the integer part of the mantissa is always 1 by default.

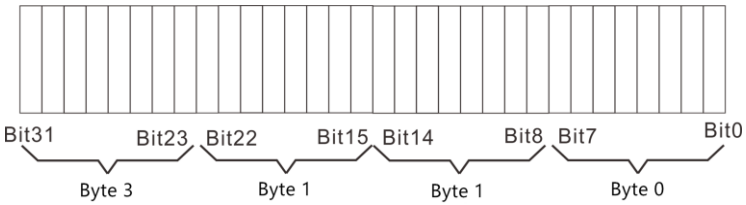

An example is given to briefly describe the representation of IEEE32 floating-point numbers. Suppose now that there is an IEEE32 floating-point number, its hexadecimal format is 0X42C80000, and the binary format is 01000010 11001000

00000000 00000000. According to the above rules, the order code should be 10000101. That is, 0X85, the fractional part of the mantissa is 0.1001 in binary, which is 0.5625 in decimal. Since the integer part of the mantissa is always 1 by default, the value of the floating point number should be +1.5625*285-7F=100.

Since IEEE32 floating point numbers can represent a large range of data with only 4 bytes, they are often used in communication to improve communication efficiency. IEEE32 floating point numbers are used more in binary communication. In the actual communication process, if the I/O device uses the INTEL company's CPU, it must be in bytes during the communication process whether the I/O device sends a floating point number to the I/O device to the PC or PC. 0, byte 1, byte 2, byte 3 sequential transmission If the I / O device uses the MOTOROLA company's CPU, the data is sent in the opposite order. This situation is not absolute. It only represents majority of cases. When it comes to data formats, the manual of the I/O device should be used first.

16-bit and 32-bit signed integers

16-bit and 32-bit signed integers use the most significant bit as the sign bit, 0 for positive numbers, 1 for negative numbers, and negative numbers for complements, for example, 16-digit signed integers for -100, which should be +100's complement, ie 0X64's complement 0XFF9C.